University of Balamand
Faculty of Engineering
Department of Computer Engineering
Fall 2025-2026

Smart Migraine Monitoring Device

Prepared by: Lana El Chaar
Rafic Srour
Nicolas Darwish

Submitted to: Dr. Fady Rouphael

A report submitted to the Faculty of Engineering in partial fulfillment of the requirements for the degree of Bachelor of Science in Engineering

Submitted on: 16th of December 2025

ABSTRACT

Migraine is such a significant challenge that affects daily life of each suffer and the thing is, not being able to predict it and manage it is real problem because it affects their daily life and avoid them to do their tasks or to engage into social life. From this tough reality, the urgent need for a user-friendly device that is capable of monitoring their triggers pain was developed. Our unique device “Smart Migraine Monitoring Device” address directly this issue, it is designed to be able to track migraine triggers, analyze them, and then to send alert to the patients. This device’s physical appearance consists of a wrist-band integrated with sensors all around it in addition to a processing unit that aims to communicate with a linked application using Bluetooth. The device also contains rechargeable battery, chosen carefully to be lightweight and comfortable to wear because it prioritizes the user’s comfort. Briefly, this device is the perfect solution to enhance their quality of life by preventing migraine episodes and manage them to live normally.

Keywords: Migraine, Monitoring sensors, Bluetooth, Processing unit

Table of Contents

ABSTRACT 2
CHAPTER 1 6
1. Introduction 6
2. Sustainability 6
3. Problem formulation 7
4. Project proposal 9
4.1. Objective: 9
4.2. Methodology: 10
4.3. Timeline Feasibility: 12
4.4. Resources: 13
4.5. Justification: 14
4.6. Feasibility: 14
4.7. Benefits: 15
5. Design Criteria 15
5.1. Primary Design Criteria: 15
5.2. Secondary Design Criteria: 17
6. Anticipated Outcome 17
7. Scope of the project 18
7.1. General constraints: 18
7.2. Technical constraints: 18
7.3. Realistic constraints: 18
8. Conclusion 20
CHAPTER 2 21
1. Introduction 21
2. Literature review 21
2.1 First article 21
2.2 Second article 24
2.3 Third article 27
2.4 Comparison 29

3. Technique Adopted 31
4. Block diagram (Flowchart) 33
5. Explanation of each function and state 34
6. Design Criteria Relevance 34
7. Anticipated Outcome Relevance 35
8. Conclusion 35
CHAPTER 3 36
1. Introduction 36
2. Generic Block Diagram: 36
3. Components 38
A. Electronic Parts 38
B. Sensor Kit 40
C. Extra Pieces 41
4. Updated Block Diagram: 43
5. Standards: 44
6. Protocols: 45
7. Conclusion: 46
Chapter 4 47
1. Description of the design functionality 47
2. Updated Features 47
3. Table of Final Components 48
4. Updated Design Flow Chart 51
5. Updated Design Block Diagram 52
Chapter 5 53
1. Protocols 53
2. Algorithms and Calibrations 56
Chapter 6 57
1. Explanation of the code 57
Chapter 7 61
Hardware Part 61
1. Real Hardware Connections and Implementation 61
Chapter 8 70

1. General Conclusion 70
2. Future Expansions 70
3. Culminating Experience 71

List of Tables

Table 1: Approximate cost of the whole device

Table 2: Comparison between different approaches of the three articles of the literature review.

Table 3: Comparison between different advantages of the three articles of the literature review.

Table 4: Comparison between different disadvantages of the three articles of the literature review.

Table 5: Comparison between different tools of the three articles of the literature review.

Table 6: ESP32 Processor

Table 7: MCP1700-3302 LDO Regulator

Table 8: TP4056 USB-C Charger Module

Table 9: AO3400 N-Channel MOSFET

Table 10: Li-Po Battery 3.7V 500mA

Table 11: Max30102 Pulse Sensor

Table 12: BME680 Environmental Sensor

Table 13: Vibrating motor

Table 14: PCB Boards

Table 15: Jumper Wires

List of Figures

Figure 1: Flowchart showing the general functionality of the device

Figure 2: Generic block diagram for Smart Migraine Monitoring Device

Figure 3: Updated block diagram for Smart Migraine Monitoring Device

CHAPTER 1

Introduction to the Smart Migraine Monitoring Device

1. Introduction

This project is a proactive solution targeting Migraine, which is basically a genetically-influenced neurological disorder affecting millions of people worldwide and disrupting them daily because of the difficulty to predict it before the migraine attack occurs. Our Smart Migraine Monitoring Device's mission is to track physiological indicators, physical activity and environmental factors in order to predict any potential migraine episodes and send alerts to the users to take action. This smart device is linked with a mobile application that takes user's input in certain circumstances for more accurate tracking of all symptoms. This device is smart enough to analyze and predict any potential risk of migraine episodes by entering the data base of all triggers collected by the device and analyze them using artificial intelligence. This unique is capable of facilitating the healing phase of all patients and will give them the power to monitor migraine's triggers step by step so they can avoid having serious headache, thus they will be able to continue doing their daily tasks without any disturbing. This device is such a unique technology that empowers individuals with greater control over their conditions by combining real-time monitoring with smart data analysis.

2. Sustainability

Sustainability ensures that present needs are met without compromising the ability of future generations to meet their own. The 17 sustainable development goals (SDGs) are the

following: 1) No Poverty, 2) Zero Hunger, 3) Good Health and Well-Being, 4) Quality Education, 5) Gender Equality, 6) Clean Water and Sanitation, 7) Affordable and Clean Energy, 8) Decent Work and Economic
Growth, 9) Industry, Innovation and Infrastructure, 10) Reduced Inequalities, 11) Sustainable Cities and Communities, 12) Responsible Consumption and Production, 13) Climate Action, 14) Life Below Water, 15) Life on Land, 16) Peace, Justice, and Strong Institutions, 17) Partnerships for the Goals

Our project aligns with several **United Nations Sustainable Development Goals (SDGs)** such as:

- SDG 3: Good health and Well-Being – this device help user in monitoring migraines, predict potential attacks, and take preventative measures. SDG 9: Industry, Innovation, and Infrastructure – By integrating Artificial Intelligence and sensors, our project promotes innovation in healthcare monitoring and advances wearable health technology.
- SDG 12: Responsible Consumption and Production – this device promotes sustainability and prioritize energy efficiency by managing power usage and using replaceable parts and rechargeable batteries.
- SDG 8: Decent Work and Economic Growth – this device reduces loss of productivity at work by preventing migraines through data-driven insights and early warnings, thus improving the workspace and well-being.

3. <u>Problem formulation</u>

3.1. Communication Limitations:

Migraines can be difficult to predict because people don't always communicate early signs or triggers of a migraine. For example, someone might ignore some symptoms like sensitivity to light, slight head pressure and forget to mention them to a doctor or input them into an application. So potentially there is a gap between when the symptoms show up and when the person actually track them in the app or addresses them with his doctor help. This communication limitation is present between the user and the environment and

between the user and the healthcare system. This indicates the need for a system that automatically detects such symptoms.

3.2. Communication Barriers:

People often misunderstand migraine triggers which could be challenging to address these observations into meaningful action, such as adjusting the lighting. Additionally, people might not understand the severity of symptoms if they're not clearly communicated. This could create barriers that can reduce effectiveness of any preventative measures.

3.3. Lack of unified Solutions:

Solutions to migraines exist like medication and smartphone apps, but they often focus on one or few aspects. For example, some solutions track migraines after they start, some advice on diet, monitor heart rate and stress.
There is room for developing a better solution by bringing together all crucial factors so users can see the bigger picture of their migraine patterns.

3.4. Social and emotional impact:

Normally, individuals that suffers from chronic migraines faces not only physical pain but also it leaves them with no choice but dealing with social and emotional challenges. Due to the difficulty of monitoring migraine's triggers and causes to predict the migraine attack accordingly, as a result, people start avoiding social events, daily activities and finds serious difficulties maintaining relationships with others. Hence, depression and anxiety start to appear making them forced to live everyday abnormally.

3.5. Rationale:

These challenges were an urgent need of something that can helps in any possible way to help patients better understand the alerts of their body and manage them before the migraine attacks occurs. Here's why we thought about a Smart Migraine Monitoring Device that aims to help users manage all migraine triggers and causes using smart data analysis by combining user's input and the data collected from the device. These analyses are not only dependent on present data, but also they combine medical history of each patient in order to help them manage their Migraine independently and avoid any allergic reactions or serious side effects on any medicine. This device's priority is to help users to rely on themselves in order to manage their Migraine before episodes occurs, which will help them having a greater social engagement and will leave positive impacts on their daily life.

4. Project proposal

4.1. Objective:

4.1.1. Primary Objective:

- Develop a Smart Migraine Monitoring Device that helps patients track migraine causes to help them manage episodes more accurately and avoid them.
- Analyzing medical history of each patient in addition to present physiological data to give accurate results, thus giving users insights to manage them before the migraine starts to become worse.

4.1.2. Secondary Objective:

- Taking into consideration user's feedback so we can have accurate analyses and improve the usability, accuracy and the effectiveness of the device.
- Making sure the device and the mobile application linked to it are user-friendly that covers all goals settled and satisfy the user's needs and preferences.
- Adding safety features on the device to have accurate results and minimize the probability of having errors or giving false alerts.

4.2. Methodology:

4.2.1. Research and Analysis:

As a first step, we had to explore current technologies related to migraine monitoring process while concentrating on wearable medical devices that can predict and cure migraine attacks. In these analyses, we focused on understanding new advancements available including AI-driven analysis and accurate biosensors in order to use the best features that suits our goals in this project. Of course, we had to seek deeply into new sensors algorithms that are able to detect environmental markers and the physiological ones as well, and finally, choose the best ones to complete the device's mission.

4.2.2. Design and Prototyping:

Construct a wearable migraine monitoring device capable of tracking physiological and environmental factors using advanced sensors. Under the importance of the user's feedback, our device is made to guarantee that this product is not only technically solid, but also, we care about it to be userfriendly, lightweight and comfortable.

4.2.3. Software Development:

The mobile application is designed to be user-friendly providing flexibility while using the application and accessibility for multi-users. By using advanced analysis of collected data, this will provide accurate insights for

customers and make sure that they received the alerts properly and verify that they took behaved wisely.

4.2.4. Testing and Optimization:

- To gain assessment on functionality in real-world scenarios, it's important to test the device on different categories of sufferers. Thus, we will make sure to include different types of users and add improvements to the device.
- To assure the product's safety and proper functionality, it's important to keep an eye on future advance technologies in order to improve the prototype including battery's lifetime, sensors and processors, as well as, software improvements like data accuracy and speed. Hence, we ensure our product meets the basic requirements in addition to its unique specifications that makes this design exceptionally useful for migraine patients.

4.2.5. Documentation and Reporting:

- Document each stage of the development process covering all instructions of users, software structure and hardware parameters. Providing clear instructions to setup the device, customization and its maintenance.

- A well-prepared report that covers user-driven changes, iterative updates and testing results. These reports are considered beneficial sources for future studies and innovations in migraine treatment studies.

4.3. Timeline Feasibility:

4.3.1. Development Timeframe:

An estimated period of ten months is needed to develop the Smart Migraine Monitoring Device. Every step, including research, design, software development, prototyping, testing and documentation will be approached carefully using this timeline.

Design Phase

The main focus of the design phase will be in depth research, review of existing technologies and the development of the smart migraine monitoring device.

4.3.1.1. Prototyping:

The goal of the prototyping process is to build a functional prototype with sensors, microcontrollers, and other necessary equipment. Continual modifications will be made in response to continuous feedback from potential customers.

4.3.1.2. Software Development:

The software will use AI-based analysis to process data from sensors, identify patterns, and predict migraines. A user-friendly mobile application or interface will also be developed to show recommendations and notifications.

4.3.1.3. Testing and Optimization:

Through comprehensive testing, we want to verify sensors accuracy, device reliability, and user satisfaction. The collected data will be studied to improve migraine prediction algorithms and enhance battery usage performance.

4.3.1.4. Reporting and Documentation:

Data analysis techniques, software architecture, and hardware design will all be included in the documentation created during the development process. Clear user instructions will also be given for simplicity of usage.

4.3.2. Regulatory Compliance:

The development process will incorporate commitment to safety and health regulations in order to align with electronic device and medical standards.

4.3.2.1. Certification Process:

Safety certificates and regulatory clearances will be considered, making sure that all necessary authorizations will be obtained. The Certification process will be planned to avoid any delay in the project timeline.

4.3.2.2. Continual Assurance of Safety and Quality:

To ensure safety, accuracy, and performance, the project will follow continuous assessments throughout the development. Regular evaluations will help prevent delays in meeting compliance requirements.

4.4. Resources:

4.4.1. Personal:

- Hardware Engineer: Designs the microcontroller setup and necessary sensors Software Developer: Codes the mobile applications as well as manages data algorithms and AI.

- Medical Advisor (Neurologist): Ensure features align with migraine medical standards
- UX Designer: Responsible for designing the interface, making it user friendly and easy to use.

4.4.2. Material Resources:

- Physiological & Environmental Sensors: Heart-rate monitors, temperature/light sensors.
- Microcontrollers.
- Rechargeable battery.
- Prototyping Tools: Test boards, 3D printer for casing.
- Programming languages, software licensing and development tools.

4.4.3. Budget:

Our design cost should not exceed 500$, which covers the cost of supplies and software. Which also includes reserved funds in case unanticipated costs arise.

4.5. Justification:

Migraines can cause severe pain, which can negatively affect productivity and well - being Current solutions are able to treat migraines that are already there. Our project addresses a critical gap in healthcare, offering early warnings and reliable signals that predict migraines before they even happen.

4.6. Feasibility:

The feasibility of the design is based on utilizing data – analysis algorithms and wearable sensors to track parameters that are related to the causes of migraines without burdening the user. A collaboration with neurologists will help us refine our algorithms to ensure accurate results which makes our design viable medically and technically.

4.7. Benefits:

This Solution can help users by providing them with early notifications, enabling them to take the necessary precautions such as medication and environmental adjustments. This solution can help reduce healthcare costs and enhance overall quality of life for people with severe migraine problems.

5. Design Criteria

This device's primary goal is to address migraine patients that suffer from sudden episodes by helping them monitoring all migraine triggers, analyzing them and sending alerts. This objective can be reached successfully by following some professional criteria that permits to attend this goal

5.1. Primary Design Criteria:

5.1.1. Function:

The device should be able to continuously track environmental and physiological parameters, process and analyze the data and warn the user of a potential migraine. This functionality aims to help users take necessary measures such as adjusting their medication or making changes in their environment before a migraine develops.

5.1.2. Durability:

In order for our design to be durable, all used components should be of good quality and robust enough to withstand different varying conditions such as changes in temperature and environment, while also maintaining reliability and accuracy over time. This allows users to depend on the device for continuous and reliable monitoring without frequent repairs or replacements. So this design can be considered durable.

5.1.3. Cost:

The cost varies around the choice of all components. The prepared list along with the prices are in the following table:

List	Price
Microprocessor: ESP32	9$
Heart rate sensor: Max30102 Pulse Sensor	5$
BME680 Environmental Sensor	27$
AO3400 N-Channel MOSFET	0.10$
TP4056 USB-C Charger Module	1.5$
Rechargeable Lithium-Po Battery 3.7v	4$
MCP1700-3302 LDO Regulator	4$
PCB Boards	5$
Vibration motor	4$
Jumper wires	0.80$
TOTAL:	60$

Table 1: Approximate cost of the whole device

The total price listed in the table is not final, as additional expenses may arise due to deeper analysis and the new components we might use.

5.2. Secondary Design Criteria:

5.2.1. Corrosion Resistivity:

The smart migraine monitoring device is well designed with a strong flexible structure making it easy to use to all patients and avoiding the risk of breaking or being damaged. Additionally, the device will be protected with a tightly sealed case against any possible harm resulted by the weather such as temperature and humidity. It's is essential to put the durability as a top 1 priority to gain the user's trust and ensure they feel secure and satisfied in their investment.

5.2.2. Appearance:

The design features a bracelet-style wearable device that fits wrist sizes comfortably. It includes a flexible and adjustable strap to ensure the comfortable fit for each patient, in addition to all sensors used for monitoring as well as the battery and the small screen. All these criteria were involved in this small wearable design to ensure its safety, functionality and to make it easy to use.

5.2.3. Comfort:

The device was made with light-weight material, strap that fits flexibly in any hand to permit natural wrist movements avoiding discomfort or damaging its functionality ensuring a comfortable experience for all patients.

6. Anticipated Outcome

Our project is centered on tracking migraine symptoms through physiological signal analysis. The information processed by the system will be presented through an interface, enabling users to track their symptoms and recognize potential triggers. The system can also have an alarm system to let users know about any early signs of migraines. The ultimate objective is to provide

improved symptom management and prevention with the aim to enhance the quality of life for those suffering from migraines.

7. Scope of the project

In this section, we will outline the key objectives of our project. We will be focusing on achieving the project's goals - reliability, usability, and affordability - while addressing critical challenges. These challenges are categorized into three distinct types of constraints.

7.1. General constraints:

General constraints must be considered in this project. The project's prototype must be fully developed, tested, and ready for presentation by the end of Fall 2025. The prototype must undergo many testing phases to ensure accurate tracking, effective functionality, and smooth hardware-software integration. The design should be affordable, accessible, and easy to use. Additionally, the device should be comfortable for long-term wear and portable for easy use in daily life.

7.2. Technical constraints:

This design has many technical issues that must be addressed. First, the device must have a unique structure to protect the sensors and circuits but remaining comfortable and flexible to fit users with various wrist sizes. These sensors are integrated to give precise feedback and accurate responses to identify all migraine triggers and conditional changes. Second, the linked mobile application aims to process the data delivered by the wearable device and guarantee that responses are sent back with the least period of delay. To conclude, such devices must obtain high levels of accuracy to guarantee an excellent solution for all migraine patients with a margin of error that does not exceed 5%.

7.3. Realistic constraints:

The realistic constraints fall into many categories. We discuss five crucial areas of our project that must be taken into consideration.

7.3.1. Sustainability:

The Smart Migraine Monitoring Device is designed to ensure sustainability by integrating energy-efficient components, reducing energy use while maintaining performance. By utilizing low-energy components and optimized processing algorithms, the device aims for longer battery life and lower electricity usage. Choosing sustainable materials also helps to promote eco-friendly production. The project promotes healthcare technology, encourages responsible resource management, and minimizes electronic waste by taking into account the full product lifespan, from manufacturing to disposal.

7.3.2. Health and Safety:

Our design focuses primarily on enhancing the user's health by providing an approach to anticipate migraine episodes. the system warns the users to take precautionary measures before severe pain occurs by tracking physiological and environmental indicators, these features help promote physical wellbeing and peace of mind.

7.3.3. Environmental:

The smart migraine prediction device encourages environmental sustainability through design choices. The components used are carefully selected to be energy – efficient which reduce overall electricity consumption. In order to minimize waste and encourage the recycling process we carefully selected the materials and used rechargeable batteries. We also made sure the design is compliant with sustainability guidelines. The product was engineered in a way that can be user - friendly and environmentally responsible.

7.3.4. Economic:

The aim of this project is to provide an economical solution that benefits the broader economy as a whole as well as individuals. The Smart Migraine Monitoring Device can reduce the need for unnecessary treatments and frequent medical visits, which can save

healthcare costs. Due to possible market demand, it encourages business growth and job creation in the healthcare technology industry. The device can also improve office productivity by allowing users to monitor and expect migraines, which lowers absenteeism and healthcare expenses for insurers and employers.

7.3.5. Ethical:

Since health-related data is highly sensitive, we made sure that protecting user privacy and confidentiality is of high priority. The collected information of users must be stored and processed securely and are only accessible to authorized personnel or the users themselves. The device is also designed to serve different individuals with diverse medical histories. While taking these measures into consideration we made sure the technology respects the user's privacy and dignity and enhances their quality of life while making sure to follow ethical standards.

8. Conclusion

To sum up, the smart migraine monitoring device is made to provide a modern wearable solution to monitor and analyze migraine triggers. This product aims to improve migraine treatment by employing biosensors and AI-based data processing, offering to migraine patients fast insights to avoid migraine's sudden episodes. This project aligns perfectly with the UN Sustainable Development Goals, aiming to offer a product with high levels of accuracy, comfort and good price. As a result, this project will enhance the quality of life of all migraine patients, encouraging them to invest in it.

CHAPTER 2

Engineering Design Process and Program Flow

1. Introduction

The purpose of the second chapter is to seek into existing literature about migraine monitoring technology. Each part of the literature review will be examined carefully, but most importantly focusing on evaluating different prototypes with various techniques and methods, rating their functionality and abstracting all their benefits as well as their weaknesses. By doing some intense analysis and research and after seeking deeply into many technologies we will be able to deduce the best strategy that suits our goals and needs in this project to make it efficient as much as it is possible. Also, this chapter sums up some approaches used that helped to come up with each reference device and describe how each part works using an understandable block diagram. Lastly, this chapter will cover the intended results as well and the applicability of the design requirements.

2. Literature review

2.1 First article

Machine Learning and Wearable Technology: Monitoring Changes in Biomedical Signal Patterns during Pre-Migraine Nights

2.1.1 Approaches:

The impact of migraine can leave significant challenges in every patient's life especially that it extends far beyond the physical pain that it occurs, but it starts badly influencing social life such as marriage, parenting, family relationships, etc… Here's a study carried out by Ms. Viroslava Kapustynska and her partners presents how the field of migraine monitoring has improved

significantly with various combination of wearable technologies integrated with a mobile application to track migraine episodes after reaching a vote of 88.8% out of 565 people would like to own a device that predicts migraine attacks and prefers it to be wrist-worn. Many techniques include self-reported diaries of all migraine triggers which had reliability and consistency challenges. Here's why recent studies suggest the use of newer Empatica Embrace Plus device which is an advanced version of Empatica E4 integrated with enhanced biosensors to constantly track migraine triggers and analyze possible attacks. Such device is able to gather sleep-mode data especially the ones related to the pre-night of the beginning of migraine attack such as heart rate variability, skin temperature, stress levels and electro-dermal activity. In addition, many mobile sensors will be used to have access on light sensor, noise sensor and GPS. AI models have shown efficient results in analyzing all gathered data using deep learning of Machine Learning techniques. Thus, to get an early detection of possible migraine episodes, all gathered data will be transmitted to a cloud-based server or a linked application to the device in order to apply the AIdriven analysis. This method provides personalized insights on specific physiological characteristics and boosts accuracy in migraine tracking.

2.1.2 **Advantages:**

Empatica Embrace Plus wearable device embraces many enhanced benefits comparing to its original version Empatica E4 that has traditional migraine monitoring techniques. First off, by tracking migraine triggers during sleep phase permits a full focus on the variations when the individual is sleeping and this way is applicable to minimize random variation in bio-signals. This phase is where the individual is completely calm, the biosensors are working properly avoiding any natural causes that could harm their well performance. Having persistent monitoring for a full cycle (sleeping period) minimizes the possibility of having an incomplete or incorrect results by eliminating reliance on patient recall.

Additionally, it serves the whole purpose of the design; by sending to the user early identification of possible migraine symptoms so they can take action, eliminating the possibility of having a full attack all of a sudden. Moreover, a well-organized linked application can be very beneficial especially when users want to visualize data clearly, they will be able to collect all data and create a customized report that can be delivered to their medical professionals, improving their medical treatment. AI-based algorithms obviously have a large ability to dig into huge datasets of each patient and spot patterns no matter what hard they can be spotted by human analysis.

Empatica Embrace Plus has also an important characteristic because it is designed to be comfortable while sleeping, lightweight and passive, prioritizing by this user's comfort to avoid the case where the user takes it off or change its place many times resulting inefficient triggers. Clearly, this device offers more effective strategies of treatment and migraine prediction than the original, prioritizing user-friendliness with a simple wearable style to promote consistent commitment to migraine monitoring.

2.1.3 **Disadvantages:**

Despite all the considered advantages, the use of wearable technology for migraine surveillance has a several drawbacks that eliminates the idea of perfection of the device. Empatica's Embrace Plus device relies only on sensor's data, that it to say, there is no subjective feedback used which could affect the process of analysis. The truth is, some biosensors can possibly be inaccurate due to many factors such as environmental conditions, some users place the device on top of their clothes instead of their skin and movements artifacts. Collected data while sleeping are not enough when you want to predict a migraine attack efficiently which means the absence of daytime migraine triggers could easily affect results. Not only this but, some users can't afford the wearable technology and the software that comes with it which will delay the widespread adoption. The confidentiality of the users is also a target attacked which will sum up to be the 3rd disadvantage of this advanced technology. That is to say, the privacy of the users must be a priority but since the

100% protection can't be guaranteed, the best way to protect users trust is by tackling cybersecurity threats and making sure all data protection guidelines are followed correctly. Furthermore, to guarantee dependable performance for large populations, some trainings of datasets and validation are required for use of AIbased predictive technologies to avoid low performance and gain user's trust of this important investment. And finally, there is an opportunity of undetected migraine occurrences due to the absence of appropriate calibration, which may result in unnecessary treatments or ineffective management techniques.

2.1.4 **Tools:**

Many important tools used in wearable migraine monitoring systems are pointed out in the reviewed study. The primary technique to gather efficient data is through integrated biosensors into wristwatch-style device which are responsible to measure all variables including temperature variations, gyroscope, EDA, accelerometer and PPG. These enhanced technologies require a paired mobile application serves as an interface and responsible of data visualization, get feedback from users and interact with them as well AI-driven analysis and predictive technologies are made by the software python and using cloud-based servers specialized with data storage and processing. Moreover, to be able to identify patterns and connections in the collected data and reply to users with some recommendations, useful feedback and real-time alerts, powerful machines are used to complete this mission with high ability of precision and efficiency. To add more, the integration of electronic health records (EHR) systems, health care providers can easily gain access and evaluate patient data resulting better clinical judgment. The final result of the advanced version of Empatica E4 is very simple, the patient will either receive per-migraine (1) or simply no migraine (0). To sum up, these resources enable and extensive strategy to manipulate migraine triggers and episodes, utilizing such enhanced technologies increase precision, usability and support patients to invest in these treatment unusual plans.

2.2 **Second article**

Continuous and automated data collection in migraine research: Extending the data collection capabilities of the Empatica E4

2.2.1 **Approaches:**

The study conducted by Daniel Ursin presents an in depth method for improving migraine research by using automated and continuous biometric data collection. The proposed solution improves the data collection capabilities of the Empatica E4 wristband —sensor device that can continuously monitor several biometrics in everyday conditions— by combining it with a specifically created Android application that communicates with the device directly in real time. This approach solves

the main challenge in migraine research: the absence of continuous, labeled physiological data that can be utilized to identify potential triggers or patterns before an attack occurs. By implementing Empatica's EmpaLink SDK and sending the data directly to the mSpider platform—a modular research framework—the system offers seamless synchronization and centralized storage of biometric signals such as electrodermal activity, heart rate, skin temperature, and mobility. One noteworthy improvement in this approach is the addition of user-driven event stagging, which enables participants to manually mark events related to migraines, generating labeled datasets for upcoming machine learning applications. Ursin also highlights the importance of real-time system tracking and user feedback, putting in place UI notifications and automatic reconnection attempts to deal with the Empatica device's frequent disconnections during actual operation. By providing a truly autonomous and predictive data collecting ecosystem, this method sets itself apart from previous solutions such as Empatica's E4 Connect and Realtime apps, which either keep data only post-session or provide restricted offline use. The study not only pushes the technical limits of wearable migraine research but also shows an in depth understanding of practical utility, scalability, and the need of low number of patients in long-term medical studies.

2.2.2 **Advantages:**

Mr. Daniel Ursin's Empatica E4-based migraine data collection system offers some interesting benefits over conventional migraine tracking techniques. First, the system's real-time ability to transmit biometric information enables enormous improvement over traditional retrospective approaches to enable fast analysis and early detection of migraine patterns. The real-time ability enables tracking of physiological parameters like skin temperature, heart rate, and electrodermal activity continuously, which improves data capture accuracy and enables dynamic feedback. The inclusion of the system within the mSpider platform is one of its most breathtaking features. It provides the safe and centralized storing of data obtained across numerous sessions, enhancing the scalability and dependability of research. The approach also centers on user empowerment by integrating manual tagging, allowing users to mark special events—such as symptom occurrence or exposure to triggers—to improve the quality of the tagged data to be used in machine learning analysis. Additionally, the prototype solves the problem of frequent disconnection of devices through smart reconnection and notification processes, which enhance the user experience and

minimize frustration with extended use. Open system architecture and customizability of software guarantee that the solution can be tailored to a number of varied research or patient requirements, thus being more versatile outside a particular use case. These mutual benefits render this system a revolutionary leap toward the advancement of intelligent healthcare solutions, with the potential to greatly enhance migraine research and patient self-management simultaneously.

2.2.3 **Disadvantages:**

Although the Empatica E4-based migraine monitoring system presents an innovative approach to real-time biometric data collection, there are certain limitations and challenges that must be acknowledged. One of the most significant problems in the system is its frequent and stealthy disconnections, which pause collecting data without any indication to the user, possibly causing serious data loss and user dissatisfaction. This issue always needs manual reconnection and monitoring, which might not be feasible for most users, particularly in unattended environments. Further, in testing, the other tools of the system for encouraging user engagement — like feedback and notifications— did not significantly impact user behavior, so further enhancements are needed to enhance the efficacy of user engagement mechanisms. Moreover, daily setup, troubleshooting, and daily device maintenance require a considerably high degree of technical knowledge, potentially preventing less technologically informed individuals or certain patient groups from being able to use the system effectively. The battery constraints of the device preclude its use for continuous monitoring, given that real-time streaming of data requires frequent charging. On top of that, the short test duration (20 days) limits the extent to which conclusions can be made regarding its long-term use and stability in various real-life scenarios. These problems underscore the necessity for further developments in software intelligence and hardware robustness to ensure that the system is reliable, user-friendly, and sustainable for long-term real-world application by migraine sufferers.

2.2.4 **Tools:**

The author has chosen a collection of software tools and hardware devices carefully that function together towards the project goal of facilitating continuous and automated collection of biometric

data for migraine research. The core of the system is the Empatica E4, a medical-grade wrist-worn sensor that can capture high-resolution physiology signals such as electro-dermal activity (EDA), heart rate, skin temperature, and accelerometer. These sensors are extremely important to monitor early warning signs and environmental patterns that can potentially develop into migraines. The E4 communicates with a custom Android application, developed with the EmpaLink SDK, that acts as the system's brain by reading sensor data, managing Bluetooth communication, and streaming data live. The system connects with the mSpider platform, a modular, research-oriented database infrastructure meant to store synchronized multi-sensor data safely and flexibly, therefore guaranteeing the usefulness of the data gathered for predictive modeling. One such unique feature in this configuration is the user-tagging interface on the mobile application where patients can manually tag migraine events, and this makes the data's value richer for subsequent machine learning processing. Additional software features like automatic reconnection logic, real-time status feedback, and background notifications were added to solve the known problem of silent device disconnections and to establish user trust with long-term deployment. The careful choice of wearable gear, communication protocols, and data infrastructure in the project shows consideration for both the technical and practical issues in migraine monitoring. The integration of these tools provides a solid basis for developing intelligent, patient-centered health applications from real-time physiological information.

2.3 Third article

Forecasting Migraine with Machine Learning Based on Mobile Phone Diary and Wearable Data

2.3.1 Approaches:

The approach used for predicting migraine attacks according to Stubberud et al.
(2023) is done by integrating mobile diary entries with sensors worn by the users to track different factors like heart rate, skin temperature and muscle tension. Users recorded on the app based diary, headaches and presence or absence of pain, use of medication and other symptoms. All the data collected from users and sensors are integrated into a machine learning model, tested

with several algorithms like random forest and gradient boosting to see if it could predict a migraine onset the following day.

2.3.2 **Advantages:**

The author's approach offered several advantages for migraine prediction. The data gathered by the system is both subjective and objective. It monitors pain levels that the user inputs and data like heart rate, skin temperature, and EMG tension information that are picked up by sensors. Another important advantage is that the design is feasible since the study relied on commonly available mobile phones and wearable devices, making it accessible for everyday users. This easy-to-use setup encourages people to use it, as the equipment is easy to wear, and the app integrates smoothly into daily routines. Even though the dataset available was limited, the random forest and gradient boosting models were able to predict nextday headaches using an AUC (area under the curve) of around 0.62. This proves that machine learning has the ability to detect pre-attack signals. The model allows for personal calibration which makes the model more accurate for each person's unique migraine triggers.

2.3.3 **Disadvantages:**

Despite all the advantages presented by Stubberud et al., the system has certain drawbacks that should be considered. The system was tested on a small sample size constituting of 18 participants with about one month of monitoring which is considered relatively short. As a result, the model may fail to capture a wider population variability. The sensors used to monitor heart rate, temperature and muscle tension may overlook important factors such as sleep quality and stress levels which could limit the accuracy of the forecast. Another noticeable drawback is that the recording window for participants was limited. Users logged information once daily or only when they remembered which limits the amount of data for the machine learning model to interpret and perform reliably, predicting accurate migraine attacks.

2.3.4 **Tools:**

Stubberud et al. carefully chose key tools and technologies to achieve a reliable and accurate design. A Mobile diary application was developed called Cerebri to collect daily headache

inputs, medication usage and other symptoms, enabling participants to log data easily on their phone. A Thermistor was used to measure skin temperature, photoplethysmography sensor to monitor heart rate and electromyography (EMG) to measure muscle tension. The data picked up by these sensors are transmitted wirelessly to the application ensuring ease of use and minimal disruption of the user. Python v3.10 was used for statistical analysis and machine learning. various algorithms such as Logistic regression, Support Vector Machine (SVM), Adaptive Boosting and Extreme Gradient Boosting (XGBoost) were tried out. Area Under the Receiver Operating Characteristic Curve (AUCROC) was used to determine the performance of the model. Random Forest and Gradient Boosting algorithms yielded the best result with the highest AUC and were used as the base models in the construction.

2.4 Comparison

Each of the three different articles discussed before has its own approaches and various tools were used in each one of them as well which made appear some advantages and disadvantages are some of them are common and some are not. To know more about their differences here is the table below that shows a comparison between the articles.

	Article 1	Article 2	Article 3
Approaches	Migraine risk prediction (classification model output)	real-time visualization and data logging, no prediction	Next-day migraine prediction
	Empatica Embrace Plus	Empatica E4	Wireless sensors such as EMG (muscle tension), PPG, thermistor.
	Supervisor machine learning	System/software engineering for stable data collection	Combined Machine Learning and subjective diary data
	local data frames and Cloud	Real-time streaming via Bluetooth + mSpider software	App-based diary + secure backend sync
	GSR, skin temp, heart rate variation	GSR, BVP, accelerometer, gyroscope	Heart rate, muscle tension, skin temperature

Table 2: Comparison between different approaches of the three articles of the literature review.

	Article 1	Article 2	Article 3
Advantages	Permits pre-symptomatic prediction using physiological data during sleep phase	potential early notifications are supported by real-time data streaming	Combines physiological changes with early symptom logging for forecasting
	Night-time monitoring minimizes random variation in bio-signals	Enhance ecological validity through practical design	Collects data during daily life, not constrained to lab conditions
	Offers information by covering all physiological changes before the start of a migraine attack	Lays technical groundwork for future predictive clinical tools	Connects factual data with individual's feelings, helpful for patient-specific management
	Passive, lightweight monitoring while sleeping and no discomfort	Emphasizes event tracking, user experience and system reliability as well.	Diary interface allows patient engagement and symptom assessment

Table 3: Comparison between different advantages of the three articles of the literature review.

	Article 1	Article 2	Article 3
Disadvantages	Relies purely on sensor data, no subjective feedback used	Absence of harmony between diary entry and symptom reporting	Manual diary entry may be arbitrary and inconsistent
	Fully dependent on Empatica's Embrace Plus device	Requires Empatica E4, limiting accessibility	Uses multiple wearable sensors which may increase complexity and cost
	Real-time practicality may be limited by sleep detection	Real-time system, but not tested in predictive clinical context	Needs consistent daily use and relies on user discipline for reliable predictions
	Data are collected only during sleeping phase, missing essential daytime migraine triggers	Tracking migraine triggers all day but no actual prediction performed	Doesn't analyze data in night-mode despite diary possible linking to sleep

Table 4: Comparison between different disadvantages of the three articles of the literature review.

		Article 1	Article 2	Article 3
Tools	**Sensors**	EDA, gyroscope, accelerometer, skin temperature and , PPG (for PR/PRV)	EDA, BVP, Skin Temp, accelerometer, gyroscope	SEMG (muscle tension), Skin Temperature, PPG (heart rate)
	Transmission unit	Synchronizing data with local frames and the cloud	Connecting to the mSpider via Bluetooth	Bluetooth between wearable sensors and mobile application
	Software used	Empatica Health Monitoring platform and Python for Machine Learning	mSpider software combined with a custom interface for multi-device integration	Cerebri mobile app for user input, signal synchronization and diary entry
	Output component	Either pre-migraine (1) or no migraine (0)	Real-time visual tracking and event labelling interface	Predicts whether or not a headache will occur the next day
	Machine learning	XGBoost, HistGradientBoosting, SVM, Random Forest, KNN	No ML modeling , relies on system architecture	Random Forest, Logistic Regression, SVM, XGBoost, AdaBoost
	Data annotation	Labeled with sleep records and migraine diaries	Using a user interface to manually tag events	Participants' daily journal entries

Table 5: Comparison between different tools of the three articles of the literature review.

3. **Technique Adopted**

The design technique adopted for the Smart Migraine Monitoring Device is based on a wearable microcontroller system capable of recording various environmental and physiological parameters in real time. The core of the system is the ESP32 microcontroller, chosen for its processing capability and for having on-board WiFi/Bluetooth support. The wearable module incorporates a number of sensors—a heart rate sensor, barometric pressure sensor, and noise sensor—each chosen for sensitivity and suitability with real-time monitoring needs. These modules constantly record data, which is processed and presented via an LCD interface, and a vibration motor offers instant tactile feedback to the user. The design of the system was guided by a detailed hardware alternative analysis, paying close attention to accuracy, affordability, and power efficiency. This ensured that every chosen component was not just functionally suitable but also practically

usable. The integration of AI-driven prediction into the mobile application enhances the hardware setup by analyzing sensor information to predict possible migraine occurrences. The combination of the two closes the gap between raw data collection and meaningful, proactive alerts. From this architecture, a detailed system block diagram was developed to show the entire data flow from sensors to user interface and alerting mechanisms.

4. **Block diagram (Flowchart)**

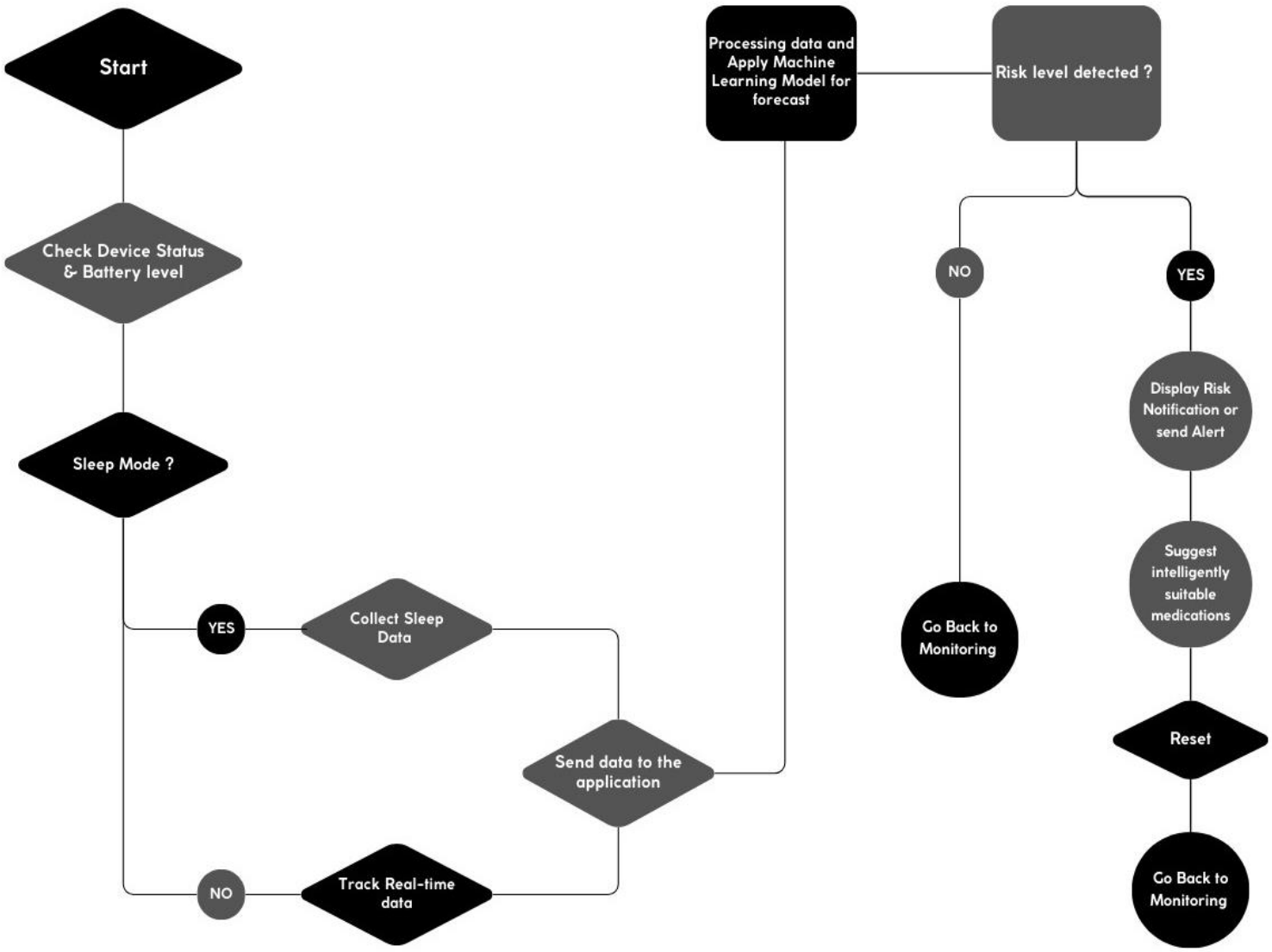

Figure 1: Flowchart showing the general functionality of the device

5. **Explanation of each function and state**

The flowchart begins with system initialization and checking of device status and battery level to ensure it is ready to operate. Once confirmed, the system determines whether it is in Sleep Mode or not. If yes, it proceeds to collect sleep data, focusing on physiological measurements like heart rate, temperature, and movement during sleep. Otherwise, if the device isn't in Sleep Mode, it proceeds to Track Real-time Data, where it constantly monitors environmental and physiological readings like noise levels, barometric pressure, and pulse when awake. In both cases, data is then transmitted to the mobile app for analysis.

Inside the app, the system moves to the processing stage, where the data is processed through a machine learning model that has been trained to forecast possible migraine attacks. The model evaluates the input values and determines whether there’s a risk level detected or not. If there is no risk level found, the system loops back again to proceed with real-time monitoring. However, if a potential migraine risk is detected, the device initiates a proper response: displaying a risk notification to the user or sending an alert where suitable and can also suggest to the user what to do in this situation, like taking a specific medicine to prevent near future migraine attacks. Following this intervention, the system goes through a reset phase and resumes monitoring, providing ongoing and adaptive health oversight.

6. **Design Criteria Relevance**

The design of the system meets important standards and fulfils the established criteria. The system is designed to be user friendly using a simple mobile app and comfortable wearables, so they don’t bother the user. The system is designed using strong hardware and sensors suited for everyday use. To keep the data secure, the system uses cloud-based storage and processing making it available for you whenever you need it. Implementation of machine learning improves the ability to predict migraine episodes.

7. **Anticipated Outcome Relevance**

The anticipated results of the migraine forecasting system matches with what the project tends to accomplish. Users should be able to greatly benefit from receiving accurate predictions of migraine episodes. This allows them to take proactive measures to avoid severe and painful attacks. This should enhance the user's life and cut down on the need for emergency medical visits.

8. **Conclusion**

The development of the smart migraine monitoring device was based on in-depth research and studies of current technologies and methods. Upon reviewing the advantages and disadvantages of each method and looking into the tools used in various studies, the development of this project was significantly guided. We established how the design will operate and outlined it in a block diagram. The design should be able to meet the expected design goals and achieve the desired results.

CHAPTER 3

The Smart Migraine Monitoring Device Prototype

1. Introduction

This chapter is a significant step towards the development of our envisioned Smart Migraine Monitoring Device, which aim is to improve the quality of life for individuals suffering from migraines by presenting early detection and preventative warnings. The main purpose of this chapter is to present a clear picture of the major components composing our system architecture and going into details in how each aspect put up to real-time health monitoring and risk prediction. It also describes the overall system composition and structure, strategic sensor and module selection, and the appropriate standards and protocols which have influenced our design choices. We aim to give a clear understanding on how the system is constantly monitoring physiological and environmental data, processing it based on predetermined conditions and thresholds through the use of machine learning algorithms, and sending back usable information to the user in the form of notification and alert. To achieve the above, we outline the overall block diagram of the system and discuss the function and integration of each main hardware and software component. Additionally, the chapter emphasizes that each component has been chosen wisely in consideration of efficiency, accuracy, energy consumption, and usability factors. Lastly, this chapter is a technical roadmap to the device's implementation, establishing groundwork for later development stages and leading toward the ultimate goal of allowing individuals to actively and intelligently control migraine risk.

2. Generic Block Diagram:

A block diagram will show the general components that will compose the design for the prototype of the Smart Migraine Monitoring Device.

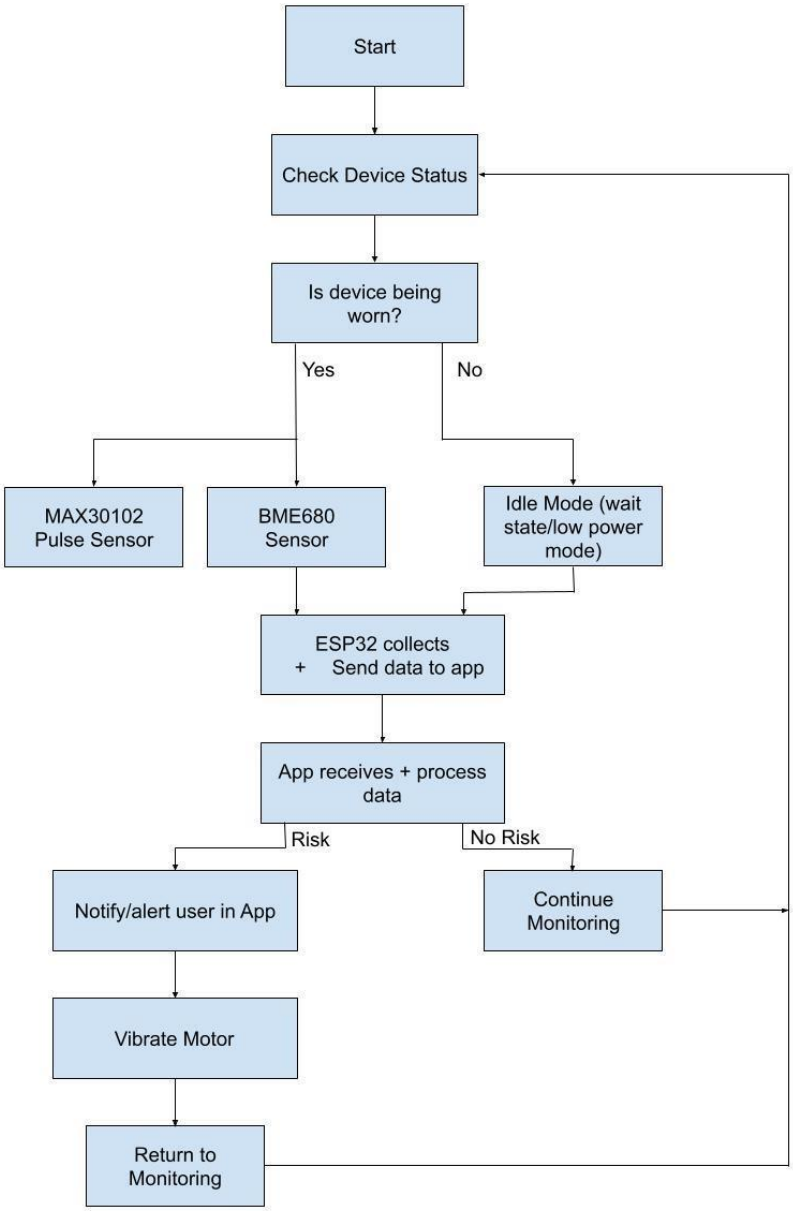

Figure 2: Generic block diagram for Smart Migraine Monitoring Device

As indicated in the figure above, the system begins by checking the device status and whether the user is wearing it actively or not. If the device is not worn, it enters a low-power *Idle Mode* to conserve energy. If worn, it proceeds with continuous data reading from two main sensors: the MAX30102 pulse sensor for heart rate monitoring and the BME680 environmental sensor for the evaluation of temperature, humidity, and air quality.

These sensors send their readings to the ESP32 microcontroller, which serves as the central device, tasked with collecting sensor data and wirelessly transmitting it to a connected mobile app via its internal Bluetooth functionality. The app takes and processes the data in real-time and, through inherent machine learning and artificial intelligence algorithms, analyzes the data to ascertain the occurrence of any potential risk associated with the onset of migraines.

When there is no risk present, the system remains in a low-resource loop mode of operation for monitoring. However, if a risk is detected, the application alerts the user through a mobile notification and also trigger the vibrating motor embedded within the device to provide an immediate physical feedback alert. After this stage, the system resets and reverts to the monitoring state, thereby sustaining operation without the need for human intervention, unless if the device is shut down or removed.

3. Components

The following is a detailed list of the needed components:

A. Electronic Parts

i. ESP32 Processor

Function	Main dual-core MCU for processing	
Specifications	Operating voltage: 3.0–3.6 V SRAM: 520 KB, Flash: 4 MB Wi-Fi 802.11 b/g/n + Bluetooth 4.2 (BLE)	
Quantity:	1	
Approx. Price:	9$	
Manufacturer	TSMC	
Data Sheet	https://www.espressif.com/sites/default/files/documentation/esp32_datasheet_en.pdf	

Table 6: ESP32 Processor

ii. MCP1700-3302 LDO Regulator

Function:	Voltage regulator for the ESP32 & sensors from the battery	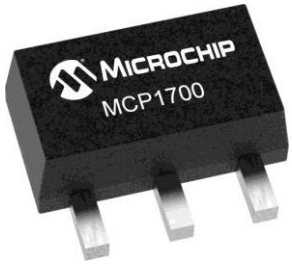
Specifications:	Output: 3.3 V ± 2 % Drop-out: ≈ 200 mV @ 250 mA Quiescent current: 1 µA	
Quantity:	1	
Approx. Price:	4$	
Data Sheet:	https://www.alldatasheet.com/datasheet-pdf/download/115225/MICROCHIP/MCP1700-3302E.html	

Table 7: MCP1700-3302 LDO Regulator

iii. TP4056 USB-C Charger Module

Function	1-cell Li-Po charger (CC/CV) with battery-protection IC.	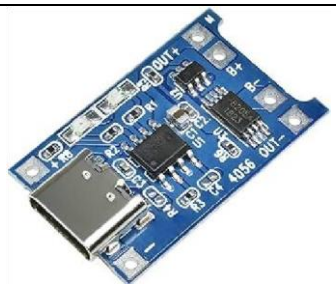
Specifications	Input: 5 V USB-C Charge current: 1 A (set by Rprog) Cut-off: 4.20 V ± 1 %	
Quantity:	1	
Approx. Price:	1.5$	
Data Sheet:	https://static.chipdip.ru/lib/977/DOC002977110.pdf	

Table 8: TP4056 USB-C Charger Module

iv. AO3400 N-Channel MOSFET

Function	Logic-level switch that drives the vibration motor from the battery.	
Specifications	VDS: 30 V, ID: 5.8 A (pulsed) RDS(on): 33 mΩ @ 4.5 V gate VGS(th): 1 V (typ)	
Quantity	1	
Approximate Price	0.10$	
Datasheet	https://aosmd.com/res/data_sheets/AO3400A.pdf	

Table 9: AO3400 N-Channel MOSFET

v. Li-Po Battery 3.7 V 500 mAh

Function	Power supply	
Specifications	Normal voltage: 3.7V (4.2V full) Capacity: 500mA	
Quantity	1	
Approximate Price	4$	

Table 10: Li-Po Battery 3.7V 500mA

B. Sensor Kit

i. Max30102 Pulse Sensor

Function	Photoplethysmography (PPG) sensor for heart-rate and heart-rate-variability (HRV).	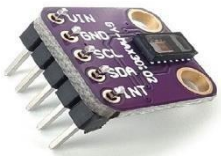
Specifications	Supply: 1.8 V logic / 3.3 V LED driver	
Quantity	1	
Approximate Price	5$	
Data Sheet	**https://www.analog.com/media/en/technical-documentation/datasheets/max30102.pdf**	

Table 11: Max30102 Pulse Sensor

ii. BME680 Environmental Sensor

Function	Measures temperature, humidity, barometric pressure and provides a VOC-based air-quality index.	
Specifications	Supply: 1.8–3.6 V Temp range: -40 – +85 °C (±1 °C) Humidity: 0–100 % RH (±3 %) Pressure: 300–1100 hPa (±1 hPa)	
Quantity	1	
Approximate Price	27$	
Datasheet	https://www.bosch-sensortec.com/media/boschsensortec/downloads/datasheets/bst-bme680ds001.pdf	

Table 12: BME680 Environmental Sensor

C. Extra Pieces

i. Vibrating Motor

Function:	Provides silent haptic feedback when a migraine is predicted.	
Specifications:	Rated voltage: 3 V Start current: < 100 mA Thickness: 3 mm	
Quantity:	1	
Approximate Price:	4$	
Data Sheet:		

Table 13: Vibrating motor

ii. PCB Boards

Function:	To connect all parts together	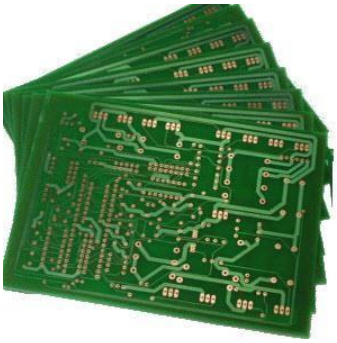
Quantity:	1 Board	
Approximate Price:	5$	

Table 14: PCB Boards

iii. Jumper Wires

Function:	To complete connections	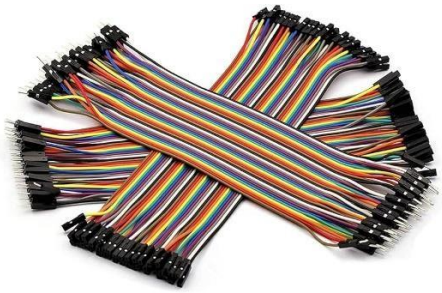
Specifications:	Male-Male Female - male	
Approximate Price:	(40 pcs for 0.80$)	

Table 15: Jumper Wires

4. Updated Block Diagram:

This section has the updated block diagram for the prototype, which contains the components from the chosen list of components in the previous section.

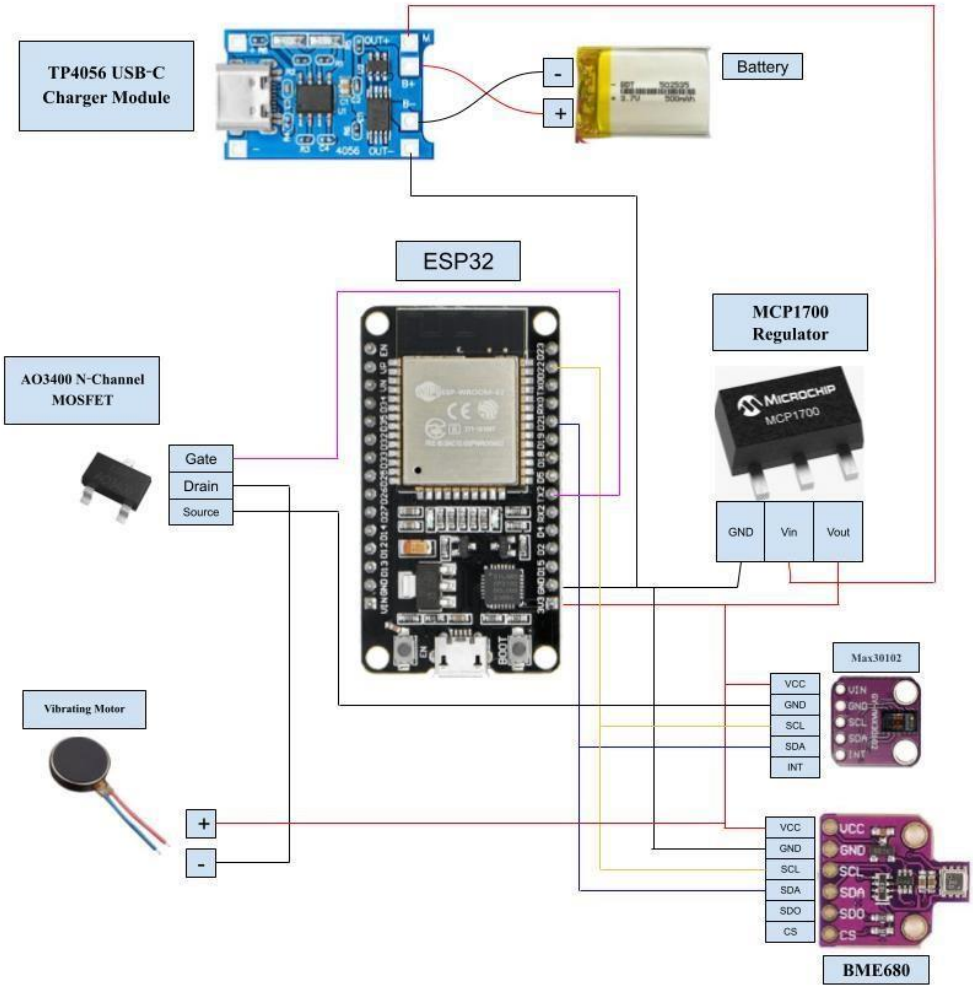

Figure 3: Updated block diagram for Smart Migraine Monitoring Device

As shown in the updated block diagram, the wearable device design begins with a lithium-ion battery connected to a TP4056 USB-C charging module, which manages safe charging and

power delivery. The regulated output from the battery is passed through an MCP1700 voltage regulator to provide a stable 3.3V supply for the ESP32 microcontroller and its connected components.

The ESP32 serves as the core processing unit, collecting data from two I^2C-based sensors: the MAX30102 pulse and SpO_2 sensor, and the BME680 environmental sensor, both of which are powered by the regulated 3.3V line.

The ESP32 continuously gathers and transmits sensor data to a mobile application using its built-in wireless communication capabilities. The app then processes this data and uses an AI-based model to determine whether there is a potential health risk.

If a risk is detected, the app triggers a feedback signal to the ESP32, which activates a vibrating motor through an AO3400 N-channel MOSFET. This motor provides immediate physical alert feedback to the user. The system loops back to a monitoring state after action is taken, ensuring continuous and responsive health tracking.

5. Standards:

In the development phase of our Smart Migraine Monitoring Device, our team is dedicated to follow high levels of the famous engineering standards that will guarantee reliability, safety and user accessibility. To start off, this design is going to stick to all significant standards of the Institute of Electrical and Electronics Engineers (IEEE) with a particular focus on **IEEE 1073-Medical Device Communication**. As a result, this will guarantee dependable and consistent data exchange because such standards will facilitate smooth interaction between the mobile app and the wearable device. Second, it's vital to mention that we ensured to follow **IEEE 1609-Wireless Access in Vehicular Environments** which will support the easy transmission between external systems and wireless data. By following such rules, this will offer strong rules for wireless communication in unpredictable situations. Moreover, it's undeniable to mention that this smart device follows blindly the **ISO/IEC 24752** standards for Universal Remote Console frameworks with regard to software and user interface design, permitting efficient system interaction for users with various levels of thinking or sensory disability. This high standard will

encourage for sure the creation of a flexible adaptive interfaces that satisfy all kinds of user's needs. Not only this but, we had to ensure the safety and longevity of all components used by obeying all guidelines of the American Society for Testing and Materials (ASTM). So to be more precise, **ASTM F963-17 (or The Consumer Safety Specification for Toy Safety)** will be used to adhere that all materials added to our wearable device are totally non-toxic and suitable for extended skin contact. Such guidelines are needed to gain the user's trust and to guarantee that our device follows perfectly all required standards to be legal to work with. Not forgetting that as for the electrical safety, **IEEE 1100: Powering and Grounding Electronic Equipment** will be followed to reduce potential electrical hazards and secure steady functioning. Finally, we also made sure that the wearable device is pleasant and user-friendly for prolonged usage and doesn't create any discomfort or strain by taking into consideration the Ergonomic principles from **ISO 9241**. Our biggest intentions are to offer a proactive health management for all migraine patients such a smart, secured and comfortable tracking system that will obviously enhance their ability to take control on all migraine triggers and treat them, avoiding potential migraine attack before it happens which will improve their quality of life.

6. Protocols:

In the creation of our Smart Migraine Monitoring device we used important communication protocols so we can guarantee efficient component interaction. First, it's important to include the 2 main protocols **Wi-Fi** and **Bluetooth** that will be very useful in our device. But here we have that **I2C** and **UART** are two main protocols used, these allows data exchange inside the device. The synchronous protocol known as **Inter-Integrated Circuit (I2C)** provides half-duplex communication across two lines. First line handles Clock
Synchronization known as **Serial Clock Line (SCL),** and the second line handles data transfer known as the **Serial Data Line (SDA).** Thus I2C is a bidirectional protocol that allows the communication of several devices with another ones across short distances. Second protocol is the asynchronous one known as **Universal Asynchronous Receiver-Transmitter (UART)** which facilitates simplex, halfduplex and full-duplex communications as well. Moreover, this protocol allows the use of wo data lines: first one is **RX(Receive)** for data receipt and **TX(Transmit)** for data transfer. To conclude, UART is a bidirectional protocol that ensures

dependable data transfer between the device and external systems which makes this ideal for short-distance communication.

7. Conclusion:

In conclusion, this report has provided a thorough explanation of the system design process. We covered every stage of the design from the original idea to the selection of the components. A block diagram was created showing all the different components used and their functions. Each potential component was carefully examined and evaluated in light of predetermined standards to guarantee peak performance. The components and connections were then depicted in an improved block diagram. In order to guarantee the design's usability, compatibility, and regulatory compliance, pertinent standards and communication protocols were also considered. This approach created a strong framework for informed component selection and established a robust framework for future enhancements, underscoring the importance of design flexibility and adherence to industry standards. We believe that this project will provide a **better management of migraine** for all patients. Such a device will be able to **enhance their quality of life** on all fields and will definitely **end their loss of productivity**. As future work, we may add many more features such as **water resistance** so we can track the physical activity of the user while swimming for example. Adding a **stress sensor** might be also a good choice to get accurate analysis when the user is stressed after noticing high heart rate. Moreover, it's important to take into consideration the battery life which requires a **switch button** to allow the user manipulating the device when is worn or not to guarantee the longest battery life and save it for monitoring tasks. Finally, it's important to keep doing **software updates** to guarantee its efficiency and security, as well as, **adjusting its physical appearance** to get the best user-friendly device.

Chapter 4

Project Proposal and Updates

1. Description of the design functionality

The Smart Migraine Monitoring Device. is a wearable electronic system designed to continuously track physiological and environmental parameters affiliated with migraine episodes. The main goal of this device is to help users in identifying early migraine warning signs and to provide continuous feedback to take preventive actions which may help to reduce the severity or frequency of attacks. The device operates as a compact, battery-powered wearable unit built around an ESP32 microcontroller. It continuously gathers data from integrated sensors, processes the measurements locally, and transmits the data through a wireless channel to a remote server for further AI analysis and predictions. Thus, based on the processed information, the system provides feedback for each user through a haptic alert mechanism and a mobile application interface. This wearable device is designed to function autonomously, customized in a way that requires minimal user interaction while ensuring comfort, safety and reliability fir long-term daily use at the same time.

2. Updated Features

After following testing and hardware validation, several updates were applied on the project in order to improve the performance, efficiency and usability of the Smart Migraine Monitoring Device. These updates are the following:

- Portable Battery-Powered Operation
  The device is powered by a 3.7V, 1100 mAh lithium-ion battery, allowing the device to function independently without being bounded to an external power source. This notably improves portability and guarantee user comfort.

- Safe USB-C Charging
  A TP4056 USB-C charging module with built-in protection was added to the device to ensure safe and convenient battery charging. The protection features prevent over-charging, over-discharging, short circuits which make the migraine device suitable for daily use.

- Stable Power Regulation
  A HT7333 low-dropout voltage regulator was integrated also into the device's circuit to provide a stable 3.3V supply to the ESP32 and the sensors as well. Some bulk and decoupling capacitors were also used to prevent voltage drops during Wi-Fi transmission, improving system stability.

- Haptic Alert System

A vibration motor was added to replace audible alarms in order to send a haptic feedback mechanism to the users. This typically allows the user to receive the alerts signals discreetly and non-intuitively which is especially important in public or professional environments.

3. Table of Final Components

Component	Description	Quantity
	Lithium-ion Battery **Nominal Voltage:** 3.7 v Capacity: 1100 mAh	x1
	USB-C Charging Module **IC:** TP4056 (with protection) **Input:** 5 V (USB-C)	x1
	ESP32 Dev Module **Supply:** 3.3V **Features used:** - Wi-Fi - GPIO - Sensor interfaces	x1

	Temperature & Humidity Sensor **Interface:** I²C **Supply:** 3.3V	x1
	Heart Rate Sensor MAX30102 **Interface:** I²C **Supply:** 3.3V	x1
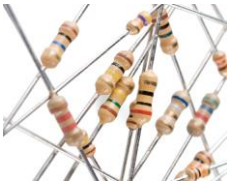	Resistors **Gate pull-down resistor:** two 10 Kohm	x2
	2N7000 N-Channel MOSFET **Gate voltage: 3.3 V**	x1
	Male-Female Wires	
	Jumper Wires	

	Vibration Motor **Supply:** 3.3 V	x1
	Wrist-band	x1
	Voltage Regulator **HT7333** **Output Voltage:** 3.3 V **Max Output Current:** ≈ 250 mA	x1
	Nylon Cable ties	

	Perfboard / prototype PCB	

4. Updated Design Flow Chart

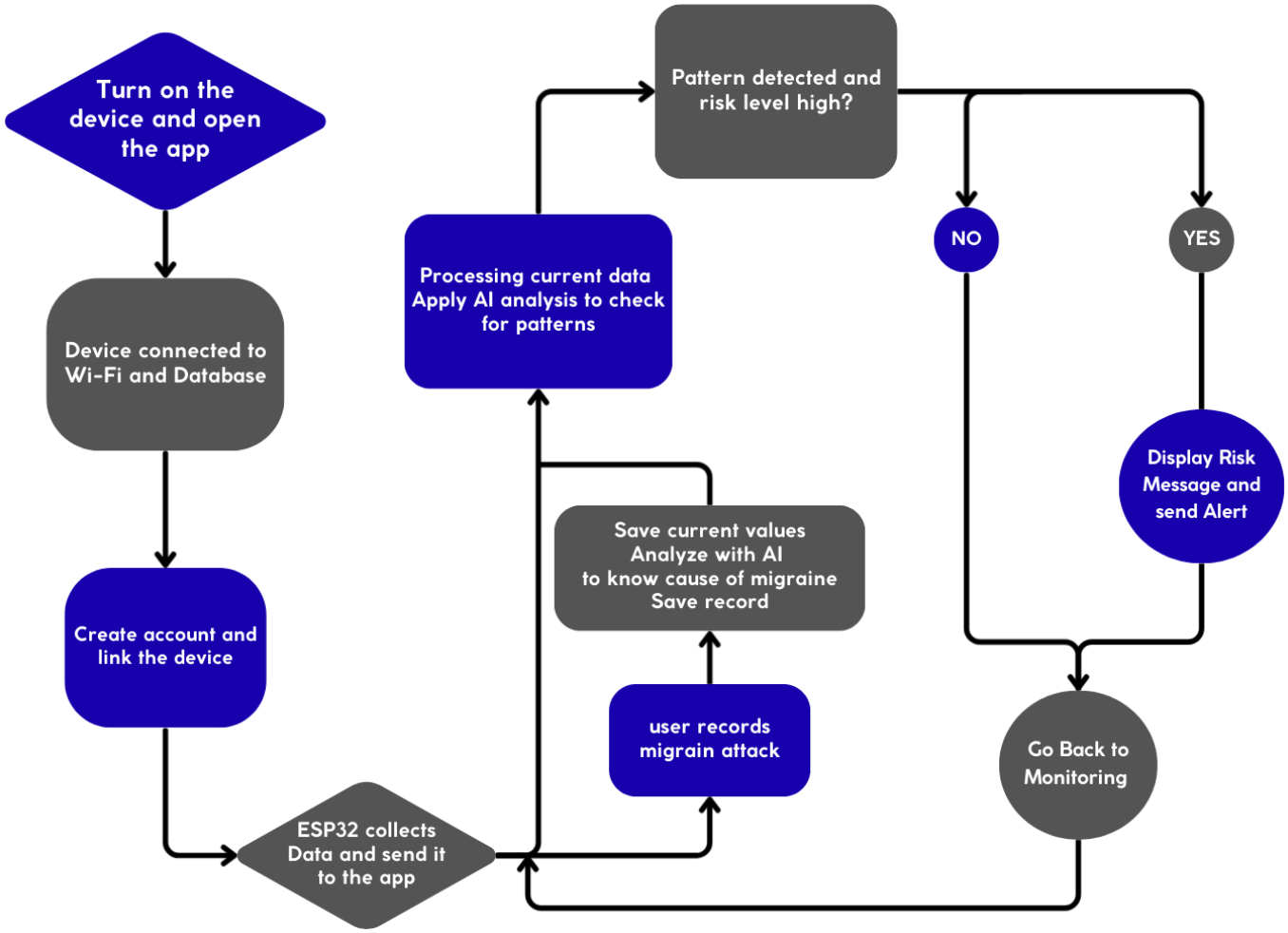

5. Updated Design Block Diagram

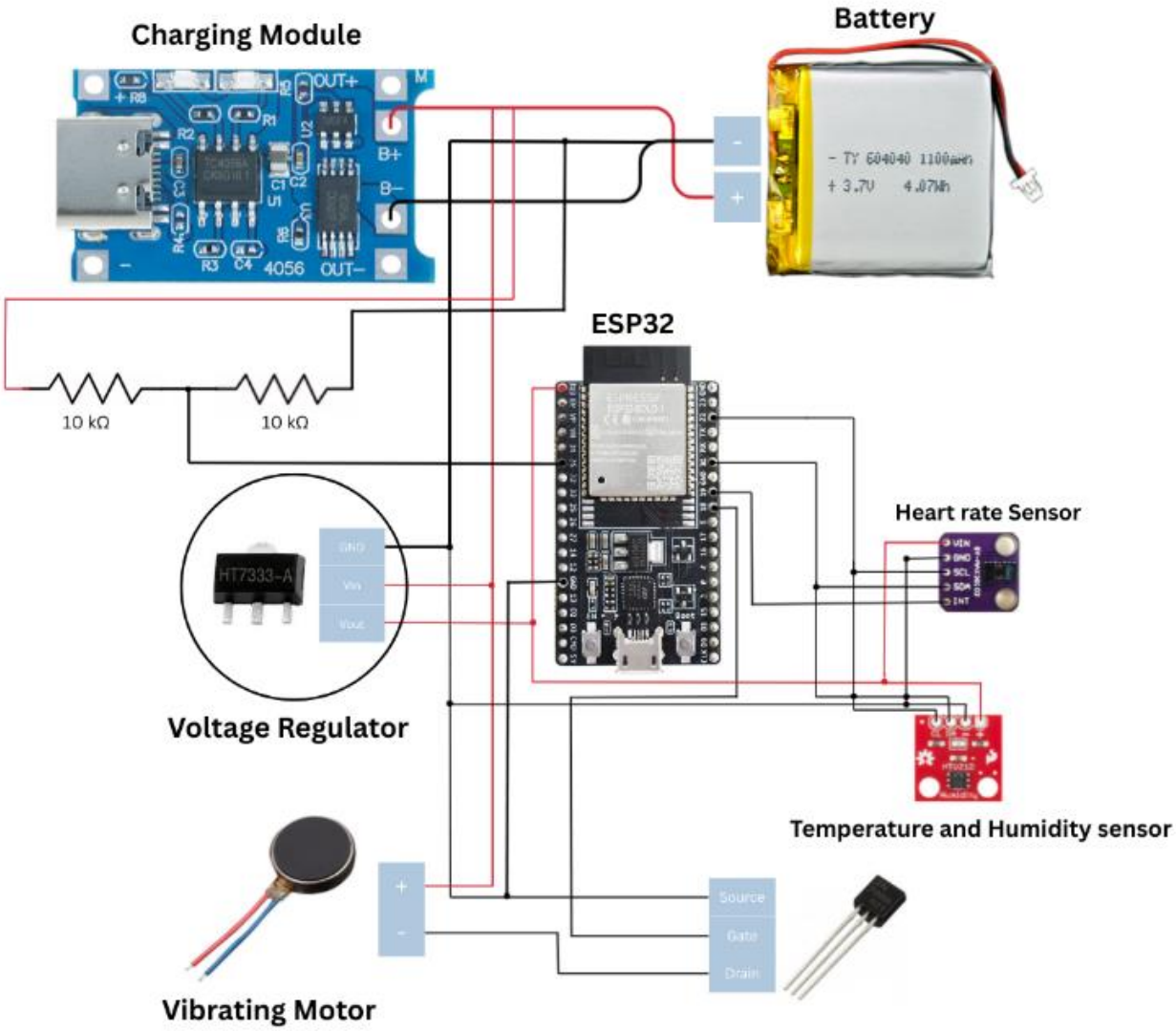

Chapter 5

Procedures

1. Protocols

1.1 I²C Protocol

The Inter-Integrated Circuit (I²C) protocol is used to communicate the ESP32 microcontroller and the physiological and environmental sensors integrated into the smart migraine monitoring device together. In this project, the MAX30105 heart rate sensor and the HTU21D temperature and humidity sensor both performs using this protocol. In fact, the I²C communication uses two shared lines which are SDA (Serial Data Line) that is used for data transfer and SCL (Serial Clock Line) which is used for synchronization. This protocol was selected in order to reduce wiring complexity and GPIO usage because it allows multiple sensors to operate on the same bus. In addition, what makes it even better is that this protocol provides reliable short-distance communication power consumption, which is essential for a battery-powered wearable device. The I²C guides the ESP32 to continuously retrieve real-time physiological and environmental data needed for the process of migraine tracking.

1.2 Analog-to-Digital Conversion (ADC)

In this device, some internal measurements and control signals within the system rely on analog voltage levels. Therefore, in order to convert these analog signals into digital values that can be handled by the microcontroller we used the ESP32's internal Analog to Digital converter. By converting input voltages into discrete digital values, the ADC enables precise interpretation of system states and sensor-related variations. To guarantee that all collected data can be reliably managed, sent and analyzed, this conversion phase is crucial.

1.3 Wi-Fi Communication Protocol

The Wi-Fi communication is used to transmit sensor data from the wearable device to a remote server for further processing and examination. The ESP32 microcontroller establishes a wireless network connection and transmits structured data packets including heart rate, temperature and humidity readings. This communication protocol was chosen over short-range wireless technologies due to its greater data speed and stability. This makes it possible to save, analyze and display migraine related real-time data through smooth connection with cloud-based platforms and mobile applications.

1.4 HTTP / REST Communication Protocol

The transaction of data between the ESP32 and the backend sever is implemented using HTTP-based RESTful communication. Sensor data is formatted in JSON and transmitted using HTTP requests. This protocol ensures platform independence and makes it easier to integrate between the embedded system, cloud services and the mobile application. Moreover, it powers future scalability such as the integration of AI-based migraine prediction algorithms on the server side.

1.5 GPIO Control Protocol

The ESP32 general purpose Input/Output (GPIO) interface is used to manipulate the vibration motor through an external switching circuit. The GPIO pin drives the gate of an N-channel MOSFET, permitting the microcontroller to activate or deactivate the motor safely. This protocol can guarantee that the ESP32 remains electrically protected while providing instant feedback to the user when migraine-related alerts are generated.

1.6 Network Time Protocol (NTP)

To ensure accurate timestamping of physiological data, the device utilizes the Network Time Protocol (NTP). Since the ESP32 lacks a built-in Real-Time Clock (RTC) battery to maintain time when powered off, it connects to an NTP server (e.g., pool.ntp.org) upon startup. This protocol synchronizes the internal system time with Coordinated Universal Time (UTC), allowing the system to tag every heart rate and temperature reading with a precise timestamp before sending it to the database. This is critical for generating historical migraine trends in the application.

1.7 Universal Asynchronous Receiver-Transmitter (UART)

The UART protocol is employed for serial communication between the ESP32 microcontroller and the workstation via the USB interface. Operating at a baud rate of 115200 bps, this protocol facilitates real-time debugging and system monitoring during the development phase. It allows the developers to view sensor outputs, connection statuses (Wi-Fi/Firebase), and error logs (e.g., "SSL Handshake Failed") directly on the Serial Monitor, ensuring that the hardware and software integration functions as expected.

1.8 SSL/TLS Encryption Protocol

Given that the device transmits sensitive health data (heart rate and migraine risk), security is paramount. The communication between the ESP32 and the Firebase Realtime Database is secured using the Secure Sockets Layer (SSL) / Transport Layer Security (TLS) protocol. This encryption layer ensures that the JSON data packets transmitted over HTTP are encrypted, preventing unauthorized interception or tampering of the user's physiological data during transmission over the network.

2. Algorithms and Calibrations

2.1 Battery Level Calibration Algorithm

To monitor the 3.7V LiPo battery using the ESP32's 3.3V ADC, a voltage divider circuit was implemented. However, raw ADC readings often deviate due to component tolerances. A software calibration algorithm was applied to convert the analog signal into a precise battery percentage:

- **Voltage Calculation:** The raw analog value (0–4095) is converted to voltage using a tuned calibration factor (≈ 1.11) to account for the voltage drop across the regulator and divider components.
- **Percentage Mapping:** The algorithm maps the usable voltage range of the LiPo battery (**3.2V empty** to **4.05V full**) to a 0–100% scale. This ensures the user receives an accurate "Low Battery" warning before the system voltage drops below the operating threshold of the sensors.

2.2 Heart Rate Signal Averaging

The MAX30105 sensor detects minute changes in blood volume (photoplethysmography). To prevent noise and sudden spikes from causing false readings (e.g., a momentary jump to 200 BPM), the firmware implements a Moving Average Filter. The system stores the last four valid beats in a rolling buffer rates[] and calculates the mean value (beatAvg). This smoothed value is what is transmitted to the database, ensuring that the "Current Heart Rate" displayed on the app remains stable and reliable.

Chapter 6

Software Part

1. Explanation of the code

1. General Overview

This chapter presents the software implementation of the Smart Migraine Monitoring Device. The software was developed using the Arduino IDE and runs on the ESP32 microcontroller. Its primary goal is to manage sensor data collection, battery level tracking, wireless communication with a Firebase real-time database and user alert actuation via a vibration motor. In order to maintain low power consumption and system stability, the software architecture was created to be modular, dependable and appropriate for continuous wearable operation.

2. Code walkthrough and function analysis

Important components of both codes, such as the used libraries, built-in functions, variables, user-defined functions, setup function, and loop function, are worth describing in terms of functionality and purpose.

Libraries:

Multiple external libraries were employed just to simplify development and make sure of the reliability of communication with hardware and cloud services

<WiFi.h> Responsible of handling wireless network connectivity.

<Firebase_ESP_Client.h> Critical to manage communication with Firebase Realtime Database.

<Wire.h> Important because it enables I²C communication with sensors.

<MAX30105.h> & <heartRate.h> These two libraries are essential because they are used for heart rate measurement and beat detection.

<Adafruit_HTU21DF.h> Interfaces with the HTU21D temperature and humidity sensor.

<time.h> Provides timestamp synchronization through NTP.

Because of their stability, documentation quality, and compatibility with the ESP32 environment, these libraries were chosen to be integrated in the code.

Variables:

The software implementation of the Smart Migraine Monitoring Device uses several key variables to manage system timing, sensor data collection, power monitoring, communication, and alert control. These variables guarantee stable operation especially that they allow non-blocking task execution, and support reliable interaction with the cloud database and actuation system. The most critical variables used in the program are used as follows:

All timing variables: *lastFirebaseUpdate*, *lastTempRead*, *FIREBASE_INTERVAL*, and *TEMP_INTERVAL*, which control the periodic execution of sensor readings and data transmission without blocking the main loop.

Heart rate processing variables: *rates*, *rateSpot*, *lastBeat*, *beatsPerMinute*, and *beatAvg*, used to detect heartbeats, calculate beats per minute, and smooth measurements through averaging.

Sensor data variables: *currentTemp*, *currentHum*, and *currentHR*, which temporarily store the latest temperature, humidity, and heart rate readings before transmission.

Battery monitoring variables: *BATTERY_PIN*, *DIVIDER_RATIO*, and *currentBattery*, which allow the system to convert ADC readings into an estimated battery percentage.

Device identification variable: *DEVICE_ID*, used to uniquely associate collected data and alerts with the corresponding ESP32 unit in the database.

Alert control variables: *MOTOR_PIN* and related logic, which are responsible of enable controlled activation of the vibration motor when a migraine alert is received.

Built-in functions:

The software part of the device makes extensive use of built-in functions provided by the Arduino framework and ESP32 libraries to guarantee reliable operation, efficient task scheduling, and communication's security channel. These functions simplify the tasks of the hardware interaction, timing control, wireless connectivity, and sensor data handling, allowing the system to operate continuously without blocking execution. By relying on well-established built-in functions, the software maintains stability while supporting real-time monitoring and cloud communication.

The most important built-in functions used in the program include:

setup() **and** loop(): which form the core execution structure of the Arduino environment, where system initialization is performed once and operational tasks are executed repeatedly.

pinMode() **and** digitalWrite(): used to configure GPIO pins and control the vibration motor through the MOSFET safely.

analogRead(): which reads the battery voltage through the ADC and enables battery level estimation.

millis(): used for non-blocking time management, allowing multiple tasks such as sensor reading and data transmission to run concurrently.

delay(): applied only in short, controlled intervals to ensure system stability without affecting real-time performance.

WiFi.begin() **and** WiFi.status(): which establish and monitor the wireless network connection required for cloud communication.

configTime(): used to synchronize the ESP32 clock with NTP servers, enabling accurate timestamp generation.

Firebase client functions: such as Firebase.RTDB.pushJSON() and Firebase.RTDB.beginStream ( ) , which handle data transmission and real-time alert monitoring.

User-defined functions:

These functions organize specific tasks such as battery level estimation, cloud data transmission, and real-time alert handling, allowing the main loop to remain organized and efficient. By separating these functionalities into dedicated functions, the software becomes easier to maintain, debug, and extend in future updated versions of the system.

The main user-defined functions used in the program are:

getBatteryPercentage(), which reads the battery voltage through the ESP32 ADC, applies calibration and voltage divider scaling, and converts the measured voltage into an estimated battery percentage.

sendToFirebase(), responsible for creating a structured JSON data packet containing sensor readings, battery level, timestamp, and device ID, and transmitting it to the Firebase Realtime Database.

streamCallback(), which is automatically triggered when a change occurs in the Firebase alert path; this function activates the vibration motor when a migraine alert is detected and resets the alert state after execution.

streamTimeoutCallback(), which handles Firebase stream timeouts and ensures continuous listening for remote alerts without manual intervention.

Setup Function:

The setup () function is executed once the system starts working and its main responsibility is to prepare the Smart Migraine Monitoring Device for normal operation. First, it starts by initializing serial communication to achieve system status monitoring and debugging. The vibration motor control pin is configured as an output and set to a low state to prevent unintended activation, while the battery monitoring pin is configured as an analog input. After that, it's important to connect the microcontroller by using predefined credentials and waits until a stable connection is achieved. Once the Wi-Fi is connected, the system synchronizes its internal clock using Network Time Protocol (NTP) servers to enable accurate timestamp generation. Firebase services are subsequently configured by setting the API key and database URL, followed by anonymous authentication. Communication reliability is improved by adjusting timeout values and increasing SSL buffer sizes. The ESP32 then starts interacting with a real-time database stream linked with migraine alerts and registers callback functions specialized to take alert activation and stream timeouts. Finally, the HTU21D temperature and humidity sensor and the MAX30102 heart rate sensor are initialized through the I²C interface and verified before the system changes to continuous operation.

Loop Function:

The loop() function continuously executes the core tasks of the Smart Migraine Monitoring Device. It monitors heart rate in real time, periodically reads temperature, humidity, and battery level using non-blocking timing, and ensures sensor connectivity. At fixed intervals, the collected data is formatted and transmitted to the Firebase Real-time Database via Wi-Fi, and at the same time network status is continuously checked. Short controlled delays are used to maintain system stability without affecting real-time performance.

Chapter 7

Hardware Part

1. Real Hardware Connections and Implementation

The Smart Migraine Monitoring Device hardware design consists of a single integrated wearable unit composed of multiple interconnected components. This unit is responsible for sensing physiological and environmental parameters, sending the collected data to the database, and providing alert feedback to the user in real time.

The hardware section includes sensors dedicated to monitoring heart rate, temperature, and humidity, all connected to an ESP32 microcontroller that serves as the main processing and communication unit. The design is powered by a rechargeable lithium-ion battery, include a charging module as well and voltage regulation circuitry that ensures efficient operation. The wireless communication is achieved through the ESP32's built-in Wi-Fi capability, enabling data transmission to a remote server.

To add more, an alert mechanism is integrated into the hardware design to notify the user quietly when migraine-related alerts are triggered. Finally, all components are combined into a compact wearable design, allowing continuous monitoring while maintaining user comfort, portability, and reliability.

- **Environmental Monitoring (HTU21D)**

  To detect environmental triggers associated with migraine onset, we selected the HTU21D Temperature and Humidity sensor. This sensor provides calibrated, linearized signals in digital format, ensuring precise measurement of ambient conditions that may influence the user's physiological state.

Key Specifications

- **Interface:** I2C (Address: `0x40`)
- **Supply Voltage:** 3.3V (Compatible with ESP32 logic levels)
- **Measuring Range:** 0–100% RH and -40 to +125°C
- **Accuracy:** ±2% RH and ±0.3°C

HTU21D with ESP32:

The sensor is connected to the ESP32 via the I2C bus using pins GPIO 21 (SDA) and GPIO 22 (SCL). Since the HTU21D operates on the same communication bus as the heart rate sensor, it was critical to ensure no address conflicts occurred. The HTU21D occupies address 0x40, allowing it to function in parallel with other peripherals without interference.

- **Physiological Monitoring (MAX30102)**

The MAX30102 is an integrated pulse oximetry and heart-rate monitor module. It was chosen to provide real-time physiological data (BPM), which serves as a primary indicator of stress or physical exertion—key factors in the project's migraine prediction algorithm.

The sensor operates on the principle of Reflective Photoplethysmography. It integrates two LEDs (Red and Infrared) and a photodetector on the same side of the module.

Key Specifications

- **Interface:** I2C (Address: `0x57`)
- **Ultra-Low Power:** Can be shut down via software (standby mode) to save battery when not in use.
- **Sample Rate:** Configurable (set to high-speed sampling in firmware to capture rapid pulse changes).

MAX30102 with ESP32:

Like the environmental sensor, the MAX30102 connects to GPIO 21 (SDA) and GPIO 22 (SCL).

- **Power Stability:** The module is extremely sensitive to voltage fluctuations. A solid 3.3V connection was mandatory to prevent signal noise, which can result in "NaN" (Not a Number) errors or false readings (e.g., 39 BPM).
- **Pull-Up Resistors:** The module relies on the ESP32's internal pull-up resistors on the I2C lines to maintain signal integrity during high-speed data transmission.
-

- **<u>Voltage Regulator</u>**

The device is powered by a single-cell lithium-ion battery with a nominal voltage of **3.7 V and 1100mAh**, which can operate between approximately **3.2 V (discharged)** and **4.2 V (fully charged)**. Since the ESP32 and sensors operate at **3.3 V**, a low-dropout voltage regulator (HT7333) which provides a fixed output voltage of 3.3V was selected to ensure that these components are fed the perfect voltage value.

These sensitive components are:

- ESP32 microcontroller
- MAX30105 heart rate sensor
- HTU21D temperature and humidity sensor

- **<u>Current Consumption Estimation</u>**

In order to check that the HT7333 regulator can provide sufficient current, the approximate current floating throughout the circuit was estimated:

- ESP32 (Wi-Fi active): ≈ **180–220 mA (peak)**
- MAX30102 sensor: ≈ **20 mA**
- HTU21D sensor: ≈ **1 mA**
- Other components (logic, leakage): ≈ **10 mA**

The total estimated maximum current is:

$$Itotal \approx 220 + 20 + 1 + 10 = 251\, mA$$

The HT7333 regulator supports up to **≈ 250 mA**, which is enough for normal operation when supported by bulk capacitors to handle short Wi-Fi current collapses.

- **<u>Battery Level Measurement Calculation (Voltage Divider)</u>**

The system is powered by a Lithium-Polymer (LiPo) battery with a voltage range of **3.2V (discharged)** to **~4.2V (fully charged)**. However, the ESP32's Analog-to-Digital Converter (ADC) pins operate within a maximum range of **0V to 3.3V**. Connecting the battery directly to an input pin

would exceed the microcontroller's voltage tolerance, potentially damaging the GPIO pin and resulting in inaccurate saturated readings.

To solve this, we implemented a voltage divider circuit to step down the battery voltage to a safe value and then connect to the ESP32 ADC.

Circuit design:

The voltage divider consists of two resistors, *R1* and *R2*, connected in series between the battery's positive terminal (V_{bat}) and Ground (GND). The output voltage (V_{out}) is measured at the node between the two resistors.

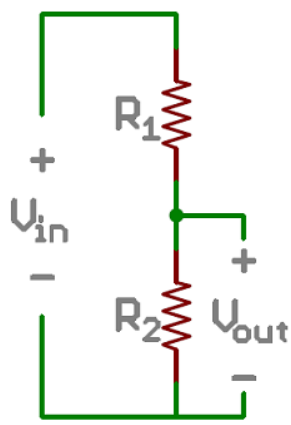

Figure showing voltage divider concept.
Source: https://learn.sparkfun.com/tutorials/voltage-dividers

Component Selection:

- **Resistors:** We selected two **10 kΩ** resistors (R1= 10kΩ, R2 = 10kΩ).
- Voltage Divider Ratio: Using the standard voltage divider formula:

$$V_{out} = V_{bat} \times \frac{R_2}{R_1 + R_2}$$

Substituting our values:

$$V_{out} = V_{bat} \times \frac{10k}{20k} = \frac{V_{bat}}{2}$$

This ratio of **2.0** ensures that even at the maximum battery charge (4.2V), the pin receives only 2.1V, which is safely within the ESP32's linear ADC detection range.

Voltage Divider with ESP32:

The divider output is connected to **GPIO 35**. This pin was specifically chosen because it belongs to **ADC1**. The ESP32's ADC2 channels cannot be used while Wi-Fi is active; therefore, using an ADC1 pin ensures reliable readings during data transmission.

The divider output is connected to **GPIO 35**. This pin was specifically chosen because it belongs to **ADC1**. The ESP32's ADC2 channels cannot be used while Wi-Fi is active; therefore, using an ADC1 pin ensures reliable readings during data transmission.

Calibration:

During testing, we observed a discrepancy between the theoretical voltage calculation and the actual multimeter readings (e.g., the ADC indicated 45% capacity when the battery was fully charged). This error was attributed to:

1. **Resistor Tolerance:** Real-world variance in the 10kΩ resistors.
2. **ADC Non-Linearity:** The ESP32's internal reference voltage and attenuation characteristics.

To correct this, we implemented a **software calibration factor**. By comparing the ADC reading against a precise voltmeter reading of **4.05V**, we derived a calibration multiplier (approximately 1.11) and adjusted the percentage mapping logic to define 4.05V as 100% and 3.2V as 0%.

- ## Haptic Feedback Driver (MOSFET Control)

To provide immediate physical feedback to the user upon the detection of a high migraine risk, a vibration motor was integrated into the wearable device. Since the vibration motor requires a drive current (typically 70–100mA) that exceeds the maximum output capability of the ESP32's GPIO pins (max 12mA–40mA), a dedicated switching circuit was required to amplify the control signal.

Circuit Topology: Switching Control

The motor control circuit is implemented using the switching element (MOSFET) that is placed between the load (motor) and the ground.

- **ON State:** When the ESP32 sends a HIGH signal (3.3V) to the MOSFET Gate, the channel between the Drain and Source opens, completing the circuit to Ground and allowing current to flow from the battery through the motor.

- **OFF State:** When the Gate signal is LOW (0V), the channel closes, cutting off the current path.

2N7000 N-Channel MOSFET with ESP32

We selected the 2N7000 N-Channel MOSFET for this application.

- **Logic Level Compatibility:** The 2N7000 has a low Gate Threshold Voltage (typically 0.8V–3.0V), ensuring it can be fully saturated (turned completely ON) by the ESP32's GPIO 18 pin without requiring an additional driver stage.
- **Current Handling:** It can handle continuous drain currents up to 200mA, which provides a safe margin for the vibration motor's load.

- ## Power Supply & Charging Management

The device is powered by a Lithium-Polymer (LiPo) battery. A TP4056 charging module was used to safely manage the charging cycle, protecting the battery from over-voltage and over-discharge conditions critical for lithium-based chemistry.

Battery Specifications

- **Type:** Lithium-Polymer (LiPo)
- **Nominal Voltage:** 3.7 V
- **Capacity:** 1100 mAh
- **Max Charging Voltage:** 4.2 V

Charging Module (TP4056)

The battery is managed by a TP4056 module with integrated protection, automating the CC/CV (Constant Current / Constant Voltage) charging profile.

- **Charging Current:** Programmed to ~1A.
- **Protection:** Cuts off power if voltage exceeds 4.2V or drops below ~2.5V, preventing permanent cell damage.

Battery Life Estimation

Based on the system's power usage analysis, the maximum estimated current consumption during active Wi-Fi transmission is approximately 250 mA.

Using this conservative (worst-case) load, the estimated continuous runtime is:

$$Battery\ Life\ =\ Battery\ Capacity\ (mAh)/\ Load\ Current\ (mA)$$

$$Battery\ Life\ =\ \frac{1100\ mAh}{250\ mAh} = 4.4\ hours$$

While the device may achieve longer runtimes in standby modes (where current drops significantly below 250 mA), this calculation guarantees at least 4.4 hours of continuous operation under maximum load conditions.

Chapter 8

Conclusion

1. General Conclusion

This project represents a significant step towards improving migraine sufferers' quality of life. The smart migraine monitoring device that we created is able to predict migraine attacks and alert the users by continuously tracking environmental and physiological factors, and send them to the AI tool via a well-structured application. This design will help them prevent migraine attacks during their daily life in order to take preventive measures. The considerations taken to ensure accurate predictions are the use of specific sensors and AI-based analysis to efficiently interpret the data in order to guarantee accurate predictions. This system produces actionable insights that are easily accessible through a linked mobile application and enables accurate monitoring of the user's condition. Additionally, the migraine device is reliable and friendly to use, making it appropriate for everyday usage because of the efficient integration of hardware and software components. To conclude, this device demonstrates how technology can solve health issues in the actual world, no matter what is the problem there's always a technical solution that can help.

2. Future Expansions

1) Water resistance

Adding this new feature will help shield the device from rain, unintentional spills and perspiration. This can be done through the use of waterproof case materials in order to guarantee device's dependability and make track migraine triggers continuously no matter what the situation is.

2) Adjust its physical appearance

Adjusting the device's physical is one of the future goals to achieve. This will ensure that the device meets all professional standards as well as make it lighter, more durable and can accommodate different wrist sizes by using flexible materials. Overall, these improvements don't affect the device's effectiveness of the predictive performance but it improves usability and guarantees long-term commitment.

3) Software Updates

Software improvements are important to continuously work on in order to guarantee the ability of implementing new predictive models, additional features that can help migraine sufferers track their migraine triggers without actually adding anything to the hardware part. This ensures as well that the mobile application meets professional developers' standards and increase its usability.

3. Culminating Experience

While integrating the Smart Migraine Monitoring Device, numerous courses in our program of study served as references and foundations for our project. Our program places an intense focus on engineering project management skills as well as teamwork abilities.

Regarding project management skills, we mostly relied on our knowledge from SUST229- Sustainable Development for Engineers and ELCP290- Introduction to Engineering Design Fundamentals, where we mastered how to efficiently analyze, plan and present engineering designs. Throughout the development of our project, these courses benefited us in all different sides like managing team member responsibilities, setting clear goals and structuring our workflow.

We gained the fundamental knowledge necessary to implement our design and interface with hardware from our major courses. For instance, we developed an intimate knowledge of microcontrollers, their architecture, and their modes of operation from CPEN313: Microprocessors and CPEN305: Microcontrollers Lab. With this in hand, we were able to successfully program the ESP32 microcontroller and combine it into our device's sensors and communication components. Additionally, the course CPEN220: Programming for Engineering Solutions improved our analytical problem-solving and C programming capabilities, which were essential for writing and organizing the device's code.

To add more, many lab courses played a vital role in enriching our understanding to move forward with our project such as ELEN201 – Instrumentation Lab, Circuit Analysis, and Electronics courses and labs (ELEN221, ELEN231, ELEN303, ELEN304). These courses taught us about hardware connections and components including resistors, light-emitting dividers, resistors as well as voltage and current

calculations and measurements, power supply connections and usage etc. Not to forget that we benefited a lot from the telecommunications course and lab in ELEN306 and ELEN341 where we learned specifically about the concept of communication.

In addition, the course Artificial Intelligence for Engineers CPEN349 played an important role in giving us basic knowledge on how to integrate AI tools in any project. But most importantly, working on the Smart Migraine Monitoring Device itself gave us great practical experience in addition to the academic knowledge we learned in our journey. By combining the hardware and software parts, we were capable to learn how to write, debug and test our system-practical skills that are very challenging to obtain without independent project-based work.

Lastly, this project improved our time management and teamwork abilities as well as to our technical proficiency as engineer students. Our sense of commitment and collaboration with the teammates was strengthened by frequent team meetings, collaborative planning and discussion of important design decisions.

As future engineers, this long path helped us develop both personally and professionally while also enhancing our organizational abilities.

Appendix A: The Final ESP32 Code

```
#include <Arduino.h>
#include <WiFi.h>
#include <Firebase_ESP_Client.h>
#include <Wire.h>
#include "MAX30105.h"
#include "heartRate.h"
#include <Adafruit_HTU21DF.h>
#include <addons/TokenHelper.h>
#include <time.h>

// ================= CREDENTIALS =================
#define WIFI_SSID "nicolas_laptop"
#define WIFI_PASSWORD "123456798"

#define API_KEY "AIzaSyDClilSXDM_5RE712y6pARBtXtYADoSZCQ"
#define DATABASE_URL "https://smmd-854c8-default-rtdb.europe-west1.firebasedatabase.app/"

// Your Device ID (Must match the folder name in your database)
const char* DEVICE_ID = "ESP32-001";

// ================= PINS & CONFIG =================
const int MOTOR_PIN = 18;        // MOSFET Gate Pin (GPIO 18)
const int BATTERY_PIN = 35;      // Voltage Divider Center (GPIO 35)
const float DIVIDER_RATIO = 2.0; // 10k + 10k resistors

// ================= OBJECTS =================
FirebaseData fbdo;       // For sending sensor data
FirebaseData fbdoStream; // For listening to alerts
FirebaseAuth auth;
FirebaseConfig config;

MAX30105 particleSensor;
Adafruit_HTU21DF htu = Adafruit_HTU21DF();

// ================= VARIABLES =================
unsigned long lastFirebaseUpdate = 0;
unsigned long lastTempRead = 0;
const unsigned long FIREBASE_INTERVAL = 10000; // Send every 10 sec
const unsigned long TEMP_INTERVAL = 5000;      // Read temp every 5 sec

// Heart Rate Averaging Variables
```

```
const byte RATE_SIZE = 4;
byte rates[RATE_SIZE];
byte rateSpot = 0;
long lastBeat = 0;
float beatsPerMinute;
int beatAvg = 0;

// Data Storage
float currentTemp = 0;
float currentHum = 0;
int currentHR = 0;
int currentBattery = 0;

// ================= HELPER FUNCTIONS =================

// 1. Calculate Battery Percentage
int getBatteryPercentage() {
  int rawValue = analogRead(BATTERY_PIN);

  // Calibration Factor: Tuned for your 4.05V max reading vs ESP32 ADC
  float calibration_factor = 1.11;

  // Calculate Voltage
  float voltage = (rawValue / 4095.0) * 3.3 * DIVIDER_RATIO * calibration_factor;

  // Convert to % (Range: 3.2V empty to 4.05V full)
  int percentage = (voltage - 3.2) * (100) / (4.05 - 3.2);

  if (percentage > 100) return 100;
  if (percentage < 0) return 0;
  return percentage;
}

// 2. Stream Callback (Triggered when Database Changes)
void streamCallback(FirebaseStream data) {
  // Debug print to see what path changed
  Serial.printf("Stream update: %s\n", data.dataPath().c_str());
  Serial.printf("Value: %s\n", data.payload().c_str());

  // Logic: Check if 'active' became true
  if (data.dataType() == "boolean") {
    if (data.boolData() == true) {
      Serial.println("⚠ MIGRAINE ALERT: Vibrating Motor!");

      // Vibrate
```

```
      digitalWrite(MOTOR_PIN, HIGH);
      delay(1500);
      digitalWrite(MOTOR_PIN, LOW);

      Serial.println("📝 Vibration finished. Resetting alert...");

      // --- FIX IS HERE ---
      delay(500); // Wait 0.5s for voltage to stabilize after motor stops
      // -------------------

      // NOW try to write to the database
      if(Firebase.RTDB.setBool(&fbdo, "/alerts/ESP32-001/current/active", false)){
        Serial.println("Alert reset successfully.");
      } else {
        Serial.println("Failed to reset alert.");
      }
    }
  }
}

void streamTimeoutCallback(bool timeout) {
  if (timeout) Serial.println("Stream timeout, resuming...");
}

// ================= SETUP =================
void setup() {
  Serial.begin(115200);

  // 1. Setup Pins
  pinMode(MOTOR_PIN, OUTPUT);
  digitalWrite(MOTOR_PIN, LOW); // Ensure motor is OFF
  pinMode(BATTERY_PIN, INPUT);

  // 2. Setup WiFi
  WiFi.begin(WIFI_SSID, WIFI_PASSWORD);
  Serial.print("Connecting to WiFi");
  while (WiFi.status() != WL_CONNECTED) {
    Serial.print(".");
    delay(300);
  }
  Serial.println("\nWiFi Connected!");

  // 3. Sync Time (Needed for secure database connection)
  configTime(0, 0, "pool.ntp.org", "time.nist.gov");
```

```
  // 4. Setup Firebase
  config.api_key = API_KEY;
  config.database_url = DATABASE_URL;

  if (Firebase.signUp(&config, &auth, "", "")) {
    Serial.println("Firebase Auth Success");
  } else {
    Serial.printf("Auth Failed: %s\n", config.signer.signupError.message.c_str());
  }
  config.token_status_callback = tokenStatusCallback;

  // --- ADD THESE LINES ---
  // Increase the timeout to prevent "payload read timed out" errors
  config.timeout.serverResponse = 10 * 1000;
  // Increase the SSL buffer size to handle encryption better
  fbdo.setBSSLBufferSize(4096 /* Rx buffer */, 1024 /* Tx buffer */);
  fbdoStream.setBSSLBufferSize(4096, 1024);
  // -----------------------

  Firebase.begin(&config, &auth);
  Firebase.reconnectWiFi(true);

  // 5. Start Listening to Alert Stream
  // Path matches your database: alerts/ESP32-001/current/active
  if (!Firebase.RTDB.beginStream(&fbdoStream, "/alerts/ESP32-001/current/active")) {
    Serial.printf("Stream begin error: %s\n", fbdoStream.errorReason().c_str());
  }
  Firebase.RTDB.setStreamCallback(&fbdoStream, streamCallback, streamTimeoutCallback);

  // 6. Setup Sensors
  if (!htu.begin()) { Serial.println("HTU21D not found!"); while (1); }

  if (!particleSensor.begin(Wire, I2C_SPEED_FAST)) { Serial.println("MAX30102 not found!");
while (1); }
  particleSensor.setup();
  particleSensor.setPulseAmplitudeRed(0x0A);
  particleSensor.setPulseAmplitudeGreen(0);

  Serial.println("System Ready.");
}

// ================= LOOP =================
void loop() {
  // --- TASK 1: READ HEART RATE (Runs constantly) ---
  long irValue = particleSensor.getIR();
```

```
if (checkForBeat(irValue) == true) {
  long delta = millis() - lastBeat;
  lastBeat = millis();
  beatsPerMinute = 60 / (delta / 1000.0);

  if (beatsPerMinute < 255 && beatsPerMinute > 20) {
    rates[rateSpot++] = (byte)beatsPerMinute;
    rateSpot %= RATE_SIZE;
    beatAvg = 0;
    for (byte x = 0 ; x < RATE_SIZE ; x++) beatAvg += rates[x];
    beatAvg /= RATE_SIZE;
    currentHR = beatAvg;
    Serial.print("♥ HR: "); Serial.println(currentHR);
  }
}

// Finger removal detection
if (irValue < 50000) { currentHR = 0; beatAvg = 0; }

// --- TASK 2: READ SENSORS & BATTERY (Runs every 5 seconds) ---
if (millis() - lastTempRead > TEMP_INTERVAL) {
  // Check if sensors are disconnected (I2C check)
  Wire.beginTransmission(0x40); // Check Temp Sensor address
  if (Wire.endTransmission() != 0) {
    Serial.println("⚠ Sensors lost! Attempting to reset...");

  // Force re-initialization
  htu.begin();
  particleSensor.begin(Wire, I2C_SPEED_FAST);
  particleSensor.setup();
  particleSensor.setPulseAmplitudeRed(0x0A);
}
  currentTemp = htu.readTemperature();
  currentHum = htu.readHumidity();
  currentBattery = getBatteryPercentage();

  Serial.printf("T:%.1f | H:%.1f | B:%d%%\n", currentTemp, currentHum, currentBattery);
  lastTempRead = millis();
}

// --- TASK 3: SEND TO FIREBASE (Runs every 15 seconds) ---
if (millis() - lastFirebaseUpdate >= FIREBASE_INTERVAL) {
  if (WiFi.status() == WL_CONNECTED) {
     sendToFirebase();
```

```
    } else {
       WiFi.reconnect();
    }
    lastFirebaseUpdate = millis();
  }

  // Critical Delay for Stability
  delay(15);
}

// Function to Send Data Package
void sendToFirebase() {
  if (Firebase.ready()) {
    FirebaseJson json;

    // Create Timestamp
    unsigned long long timestamp_ms;
    time_t now = time(nullptr);
    if (now > 100000) {
      timestamp_ms = (unsigned long long)now * 1000ULL;
    } else {
      timestamp_ms = (unsigned long long)(millis()) + 1700000000000ULL;
    }

    // Populate JSON
    json.set("temperature", currentTemp);
    json.set("humidity", currentHum);
    json.set("heartRate", currentHR);
    json.set("batteryLevel", currentBattery);
    json.set("timestamp_ms", timestamp_ms);
    json.set("deviceId", DEVICE_ID);

    Serial.print("Pushing data... ");
    if (Firebase.RTDB.pushJSON(&fbdo, "/sensorReadings", &json)) {
      Serial.println("OK");
    } else {
      Serial.println("Err: " + fbdo.errorReason());
    }
  }
}
```

Appendix B: Components Data Sheets

Component	Description	**Link to Data Sheet**
	Lithium-ion Battery **Nominal Voltage:** 3.7 v Capacity: 1100 mAh	ASR00008_1100mAh-3078662
	USB-C Charging Module TP4056	TP4056
	ESP32 Dev Module	esp32_datasheet_en
	Temperature & Humidity Sensor HTU21D	1899_HTU21D
	Heart Rate Sensor MAX30102	max30102.pdf

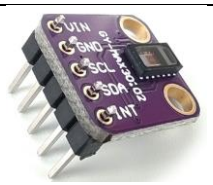		
	2N7000 N-Channel MOSFET	2n7000-n-channel-enhancement-mode-vertical-dmos-fet-data-sheet-20005695a.pdf
	Vibration Motor	13322e5922a19e2232190e480a0d40cff5cdc5c2
	Voltage Regulator **HT7333**	4419381

REFERENCES

[1] Sustainable Development Goals, United Nations. (n. d.). https://sdgs.un.org/goals

[2] Kapustynska, V., et al. (2024). "Machine Learning and Wearable Technology: Monitoring Changes in Biomedical Signal Patterns during Pre-Migraine Nights." Healthcare, 12(17), 1701. DOI: https://doi.org/10.3390/healthcare12171701

[3] Stubberud, A., et al. (2023). "Forecasting migraine with machine learning based on mobile phone diary and wearable data." Cephalalgia, 43(5). DOI: https://doi.org/10.1177/03331024231169244

[4] Ursin, D. (2023). "Continuous and automated data collection in migraine research." Master's Thesis, UiT The Arctic University of Norway. Handle: 10037/30402.

[5] **ISO/IEEE 11073** Health informatics - Point-of-care medical device communication (https://standards.ieee.org/ieee/11073/1568/)

[6] **IEEE 1609.2**Wireless Access in Vehicular Environments - Security Services(https://standards.ieee.org/standard/1609_2-2016.html)

[7] **ISO 9241-210**Ergonomics of human-system interaction - Human-centred design(https://www.iso.org/standard/77520.html)

[8] **ISO/IEC 24752**Universal Remote Console (URC) Framework (https://webstore.iec.ch/en/publication/21441)

[9] 5ASTM F963-17 Standard Consumer Safety Specification for Toy Safety (https://webstore.ansi.org/standards/astm/astmf96317)

[10] 6IEEE 1100 Powering and Grounding Electronic Equipment (The Emerald Book) IEEE Xplore